higher education & training

Department:
Higher Education and Training
REPUBLIC OF SOUTH AFRICA

NATIONAL CERTIFICATE (VOCATIONAL)

PULP AND PAPERMAKING TECHNOLOGY
NQF LEVEL 3

(6050383)

3 March 2020 (X-paper)
09:00–12:00

This question paper consists of 7 pages.

239Q1S2003

Copyright reserved

TIME: 3 HOURS
MARKS: 100

INSTRUCTIONS AND INFORMATION

1. Answer all the questions.
2. Read all the questions carefully.
3. Number the answers according to the numbering system used in this question paper.
4. Start each section on a new page.
5. Use only a black or blue pen.
6. Write neatly and legibly.

Copyright reserved

QUESTION 1

Indicate whether the following statements are TRUE or FALSE by writing only 'True' or 'False' next to the question number (1.1–1.5) in the ANSWER BOOK.

1.1 Grabbles are large machines used to move materials on a long flat belt.

1.2 Ink flotation is a separation process in which air is used to remove ink particles from the slurry.

1.3 Pulpstone is made from stone and fine sand, so that there are no gaps on the surface of the stone.

1.4 Diffusion washers are made up of the same circular disks with the same centre.

1.5 Too much moisture causes the supercalendered paper to turn black.

(5 × 1) **[5]**

QUESTION 2

Choose a term from COLUMN B that matches a description in COLUMN A. Write only the letter (A–G) next to the question number (2.1–2.5) in the ANSWER BOOK.

COLUMN A		COLUMN B	
2.1	Container where chips are stored	A	hardwood
2.2	Tree with fibre length of 4 to 4,5 mm	B	binder
2.3	Tree with fibre length of 1 to 1,5 mm	C	conveyor
2.4	Withdrawing through a physical or chemical process	D	additives
		E	softwood
2.5	Substance making components of a coating mixture stick together	F	silo
		G	extraction

(5 × 1) **[5]**

Copyright reserved

QUESTION 3

Give ONE term for each of the following descriptions by writing it next to the question number (3.1–3.5) in the ANSWER BOOK.

3.1 A machine used to cut logs into woodchips

3.2 A combination of activities performed to ensure that a product of high quality is produced

3.3 A quick process used in thermomechanical pulping for drying of material to remove most of its moisture

3.4 Substances that cause other substances to combine with oxygen

3.5 An action caused by two surfaces sliding or rubbing against one another

(5 × 1) **[5]**

QUESTION 4

4.1 More bark in the pulp means that the paper will be darker than desired.

4.1.1 Give FOUR ways to measure the amount of bark present in the pulp. (4)

4.1.2 Name THREE types of debarkers. (3)

4.2 Discuss how chips are sampled from a stopped conveyor belt. (3)

4.3 State FOUR factors that may affect the quality of bagasse that a paper mill receives from a sugar mill. (4)

4.4 How would you remedy the poor performance of a bagasse washer if samples taken from the outlet are still full of contraries? (3)

[17]

Copyright reserved

QUESTION 5

5.1 Name TWO types of equipment used to repulp secondary fibre. (2)

5.2

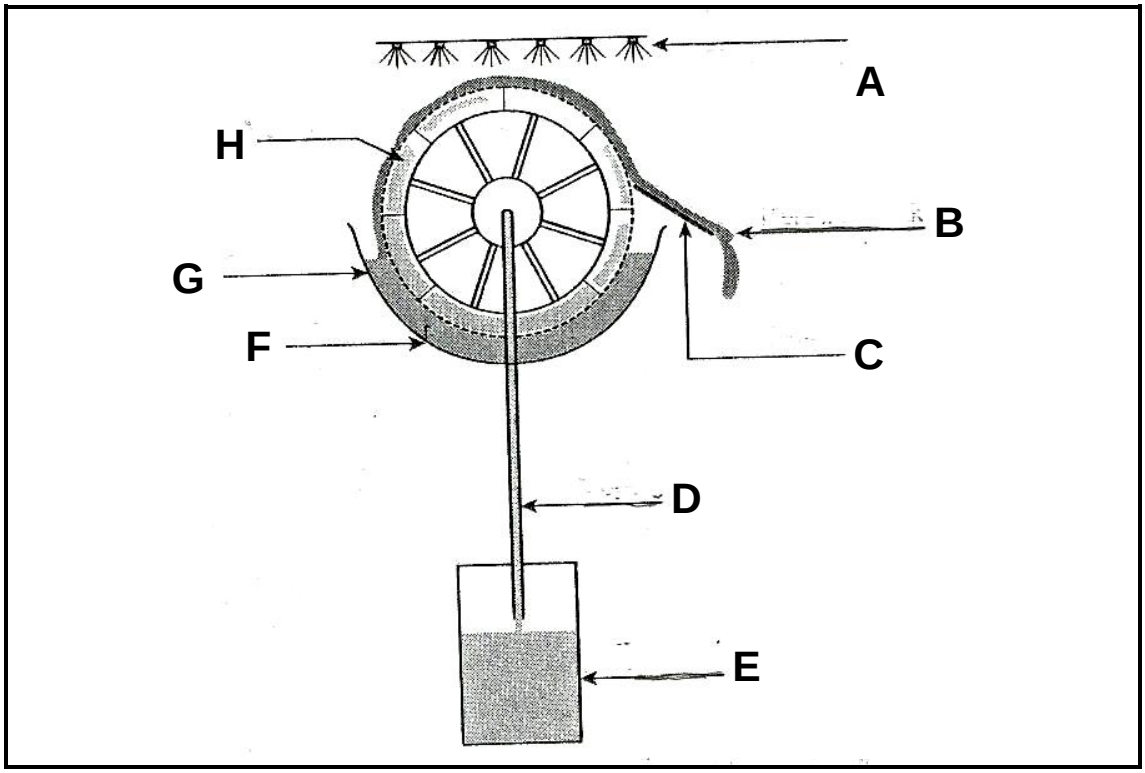

Label the diagram of a rotary vacuum drum washer by writing only the answer next to the letter (A–H) in the ANSWER BOOK. (8 × 1) (8)

5.3 What are the THREE steps in ink flotation? (3)

5.4 Complete the following table regarding ground-wood pulping equipment by writing only the answer next to the question number (5.4.1–5.4.4) in the ANSWER BOOK.

GRIT SIZE	PULP PRODUCED	PULP PRODUCT
Course	Rapid draining with good strength properties	5.4.1
5.4.2	Fine pulp that drains slowly	5.4.3
Medium	5.4.4	Paper used for temporary applications such as leaflets and newspaper

(4 × 1) (4)

[17]

QUESTION 6

6.1 Which factors indicate that the shower is not effective? (2)

6.2 Choose ONE term from the list below for each of the following descriptions and write it next to the question number (6.2.1–6.2.5) in the ANSWER BOOK.

tear; opacity; freeness; burst; brightness

6.2.1 Assesses the general strength of paper

6.2.2 Shows how well the paper stops light from passing through it

6.2.3 Shows how well the paper will resist tearing

6.2.4 Shows how bright the paper will be

6.2.5 Shows how fast water drains from the pulp and if it can be used to make paper

(5 × 1) (5)

6.3

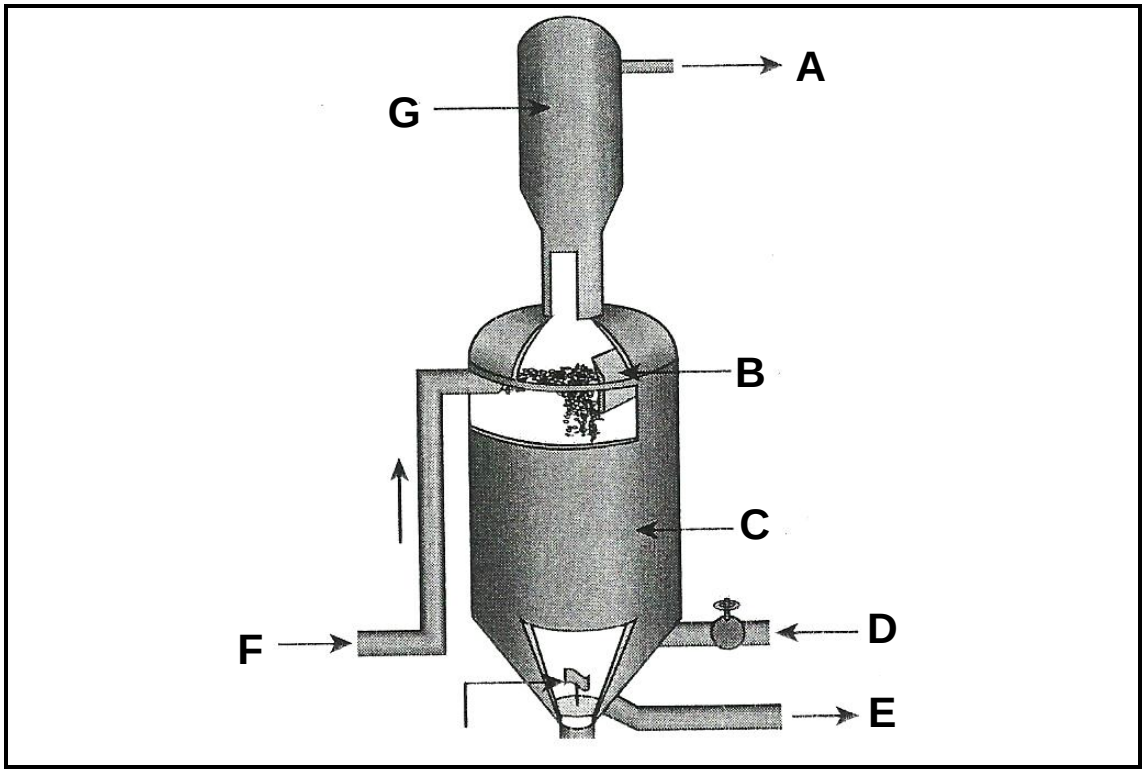

Label the diagram of a blow tank by writing only the answer next to the letter (A–G) in the ANSWER BOOK. (8 × 1) (8)

6.4 Give TWO advantages of the sulphite pulping process. (2)

[17]

QUESTION 7

7.1 Which FOUR methods are used in the industrial production of chlorine dioxide? (4)

7.2 Give TWO reasons why cooking liquor is washed out of the pulp. (2)

7.3 Explain the working principles of an atmospheric diffusion washer. (7)

7.4 Give FOUR reasons for poor washing performance. (4)
[17]

QUESTION 8

8.1 Explain the working principles of a supercalender. (3)

8.2 List the components of supercalender rolls. (4)

8.3 Sketch a labelled diagram of hot-melt lamination. (6)

8.4 Give the main function (application) of each of the following pieces of finishing equipment:

8.4.1 Slitter rigs

8.4.2 Revolving knife (rotary cutter)

(2 × 1) (2)

8.5 Name TWO pieces of equipment used to produce coating slurry. (2)
[17]

TOTAL: 100

Copyright reserved