higher education & training

Department:
Higher Education and Training
REPUBLIC OF SOUTH AFRICA

MARKING GUIDELINE

NATIONAL CERTIFICATE (VOCATIONAL)

PROCESS CONTROL
NQF LEVEL 3

XX February 2020

This marking guideline consists of 5 pages.

Copyright reserved

SECTION A

QUESTION 1

1.1 True
1.2 True
1.3 True
1.4 True
1.5 False
1.6 False
1.7 False
1.8 True
1.9 True
1.10 False

(10 × 1) **[10]**

QUESTION 2

2.1 C
2.2 F
2.3 E
2.4 B
2.5 A
2.6 D

(6 × 2) **[12]**

TOTAL SECTION A: 22

SECTION B

QUESTION 3

3.1
- Strip recorders
- Circular-chart recorders
- Roll-chart recorders
- XY recorders
- Hybrid recorders
- Paperless recorders (6)

Copyright reserved

3.2

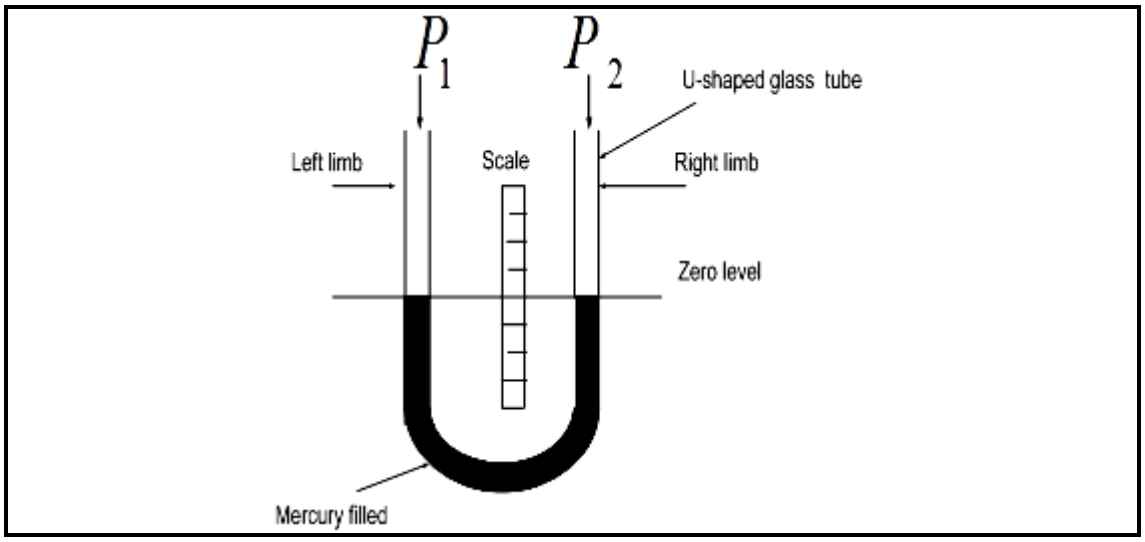

(6)

3.3
- Cheap
- Interchangeable
- Standard connections
- Measures a wide range of temperatures (4)

3.4 In indirect measurement the property that changed with the liquid level in the container is measured. In direct measurement the level is measured directly i.e. the instrument is used to measure exactly what must be measured. (2 + 2) (4)

3.5 An interlock is a device that helps prevent a machine from harming its operator or damaging itself by stopping the machine when tripped. (2)

[22]

QUESTION 4

4.1

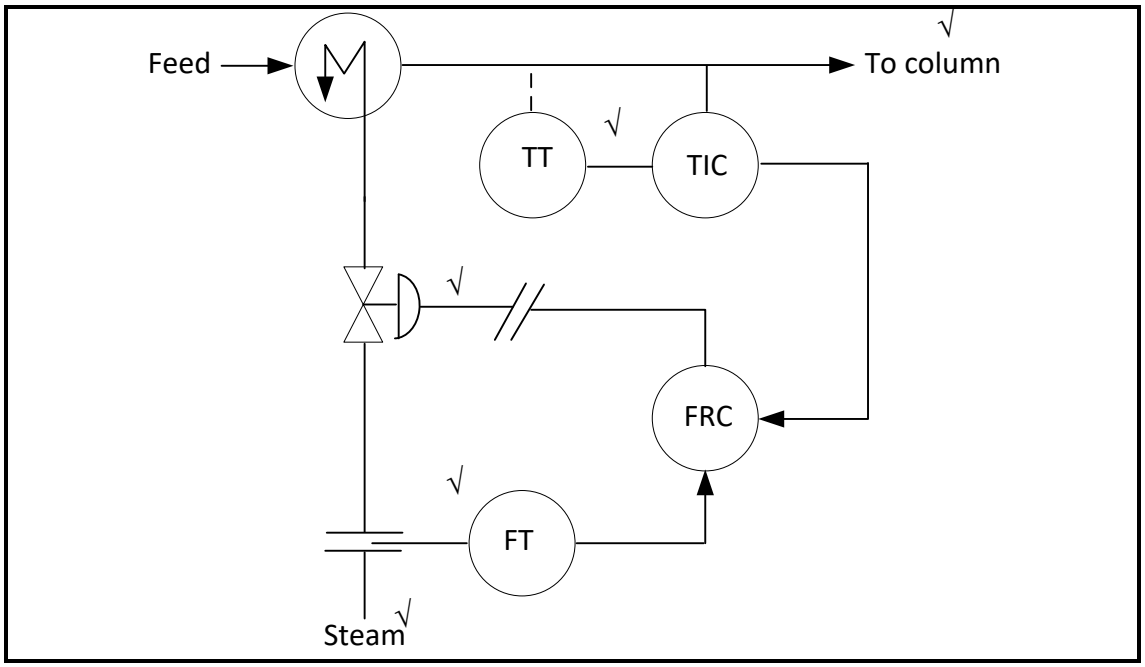

(6)

4.2
- Indicates the flow of plant processes
- Helps operators to understand how a process works
- Shows the relationship between all major steps in a process environment

(3 × 2) (6)

4.3 An actuator is a mechanical device that can be used to prevent motion. (2)

4.4 A trip is an instrument-safety device that lowers the risk of an unwanted event happening by cutting off the power to the process or device when there is potential danger. (3)

[17]

QUESTION 5

5.1
- Automatic control:✓ An automatic control system is a closed-loop control system that does not need any human effort when the process is operating normally.✓ It automatically sensors deviation or error and employs the correction action.✓✓
- Manual control:✓ Manual control means that physical or mental input from a person is utilised.✓ There is no feedback, i.e. no monitoring of the output.✓
- Cascade control:✓ A cascade control loop consists of two controllers instead of the more common one controller in the feedback control.✓ The set point to the control loop is fed into the primary controller while the output of the primary controller becomes the set point to the secondary controller.✓✓

(11)

5.2
- Define the problem clearly.
- Collect information about relevant changes.
- Develop possible causes.
- Develop solutions.
- Rectify the problem.
- Retest the system. (6)

5.3 5.3.1 Zero setting entails adjusting an instrument indicator to zero before any measurement is taken.

5.3.2 Calibration means setting an instrument to a standard or base value using another instrument of the same type to take the same measurement.

5.3.3 Bias setting refers to when an instrument operates at a specified set point. It is a systematic error where the instrument moves away from the true value.

5.3.4 Ratio setting is a ratio of one quantity in relation to another. When incorrect information is reported due to an incorrect ratio it is a ratio-setting malfunction.

(4 × 3) (12)

Copyright reserved

5.4
- Out-of-range readings
- Abnormal process parameters
- Poor control range
- Low or high ambient temperature (4)

5.5
- Broken or loosely joined wires
- Corroded or dirty connection points
- Wiring too small for the applied load
- Incorrect cable wiring
- Missing ground wire
- Unfavourable environment
- Unshielded wiring (Any 6 × 1) (6)

[39]

TOTAL SECTION B: 78
GRAND TOTAL: 100

Copyright reserved