higher education & training

Department:
Higher Education and Training
REPUBLIC OF SOUTH AFRICA

MARKING GUIDELINE

NATIONAL CERTIFICATE (VOCATIONAL)

PLUMBING
NQF LEVEL 4

XX February 2020

This marking guideline consists of 6 pages.

Copyright reserved

QUESTION 1: BASIC BUILDING WORK AND BUILDING MANHOLES

1.1 A profile is a length of timber✓ that provides an accuarte guide for the wall you are going to build. ✓ (2)

1.2
- Check that the foundations have been cast level.
- Measure out and mark the walls.
- Erect the profiles and span the builder's line.
- Lay the first course.
- Lay the subsequent courses. (5)

1.3 750 mm (1)

1.4 Benching is the smooth surface that slopes downwards from the sides ✓ (walls) of the manhole to the channel in which the drainpipes are lying. ✓ (2)

[10]

QUESTION 2: BELOW-GROUND DRAINAGE SYSTEM

2.1 A site datum is the fixed measurements on the building site to be used as a reference or a starting point for measuring all the invert levels of the drain. (2)

2.2 It enables the plumber to clear blockages easily and quickly. (1)

2.3
2.3.1 False
2.3.2 False
2.3.3 True
2.3.4 True
2.3.5 True
(5 × 1) (5)

2.4 Depth = Datum level ✓– invert level✓ of municipal connection (2)

2.5 An inspection chamber is an access point smaller than a manhole that allows a plumber to inspect, ✓test and maintain a drain from the surface (ground level). ✓ (2)

2.6
- A water level
- Boning rods and sight rails
- A dumpy level with a tripod and measuring staff
- A spirit level, a straight edge, a wooden gradient template and metal or wooden pegs
- Profile boards (Any 3 × 1) (3)

2.7

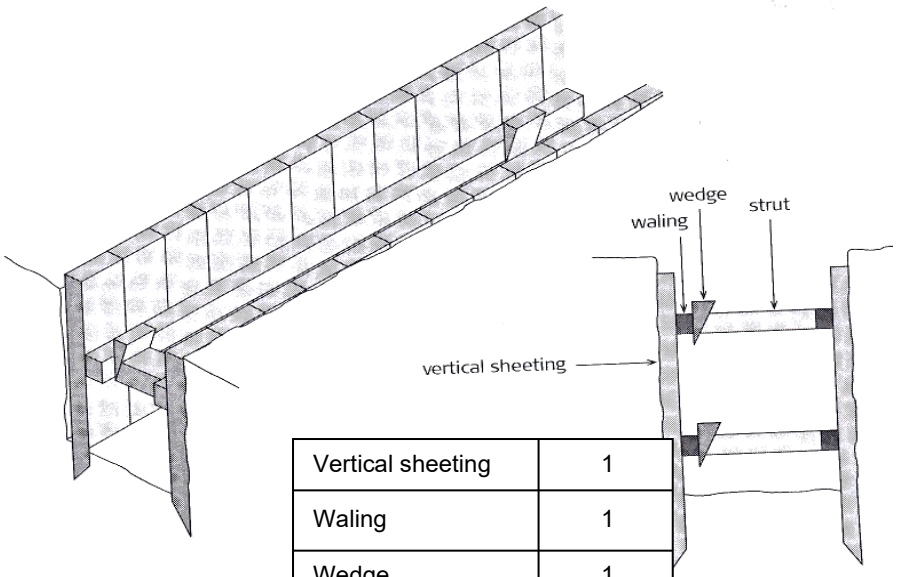

Vertical sheeting	1
Waling	1
Wedge	1
Strut	1
Neatness	1

(5)

[20]

QUESTION 3: PLUMBING MAINTENANCE AND REPAIRS

3.1
- Copper cutter/hacksaw
- Tape measure
- Pencil/marker
- Gas torch
- Sandpaper
- Solder
- Flux (Any 4 × 1) (4)

3.2
- Shut down the water main.
- Remove the old jumper plate and washer.
- Use a reaming tool to grind away any dirt build-up that may have collected on the seat of the tap.
- Make sure that the tap is fully open.
- Screw the tap base into position, making sure the washer seat is in position. (5)

3.3 Water expands when it freezes. ✓This expansion exerts a huge pressure on the pipe walling. ✓ (2)

3.4
- Remove the entire section of pipe between two couplings and screw a new section into the existing structure.
- Remove only the broken bit and replace it by fitting a new section of pipe with coupling to hold the new section. (2 × 2) (4)

3.5 3.5.1 C
3.5.2 E
3.5.3 D
3.5.4 B
3.5.5 F

(5 × 1) (5)

[20]

QUESTION 4: BOX GUTTERS AND CHIMNEY FLASHING

4.1
- Zinc
- Zinc alloy
- Aluminium alloy
- Copper
- Lead (5)

4.2 A stop end is a gutter component✓ that is fitted at the two ends ✓of a gutter installation. (2)

4.3 Tin snip (1)

4.4
- Drill plugholes for screws.
- Screw flashing into the wall with stainless steel screws.
- Screws must be placed at 300 c/c.
- Seal the gap between the flashing and wall with suitable sealant. (4)

4.5
- Apron flashing
- Step flashing
- Back gutter (3)

[15]

QUESTION 5: INSTALLATION OF SOLAR WATER HEATERS

5.1 It is the energy or heat that is sent out by the sun ✓in the form of waves. ✓ (2)

5.2 There would be no life on earth. (1)

5.3
- Sunlight enters the solar collector box through a glass cover.
- When it reaches the black metal absorber plate inside the box, the sunlight turns to heat.
- Insulation keeps this newly created heat from escaping.
- Heat builds up and in turn heats up the water in metal tubes, which are part of the collector and lie on top of the absorber plate.
- This hot water then flows, or is transported, to a storage tank.
- An additional traditional heater powered by electricity can be used to keep this hot water hot.
- This can use less electricity than heating up cold water. (Any 6 × 1) (6)

5.4
- An active solar water heater uses electric pumps✓ to circulate water through the collectors. ✓
- A passive solar water heater uses gravity and natural tendency for water to rise as it is heated to circulate water through the collectors.✓It does not contain any electrical components.✓ (2 × 2) (4)

5.5
- Pumped direct system.
- Pumped indirect system.
- Drain back system. (3)

5.6 A demand water heater is a heater in which the water is heated✓ at the time of demand. ✓ (2)

5.7 A heat exchanger is used to transfer heat from the fluids✓ (glycol fluid) circulating through the collector in the primary circuit to the portable water in the secondary system. ✓ (2)

5.8 This will limit the amount of radiation ✓the system receives. ✓ (2)

5.9 This type of solar collector consists of parallel rows of transparent glass tubes.✓ Each tube contains a glass outer tube and a metal absorber tube attached to a fin.✓ The fin's coating absorbs solar energy and inhibits heat loss.✓ (3)

[25]

QUESTION 6: BASIC BUSINESS CONCEPTS

6.1 A quote is a statement of how much it will cost to build, install or repair something. (2)

6.2 6.2.1

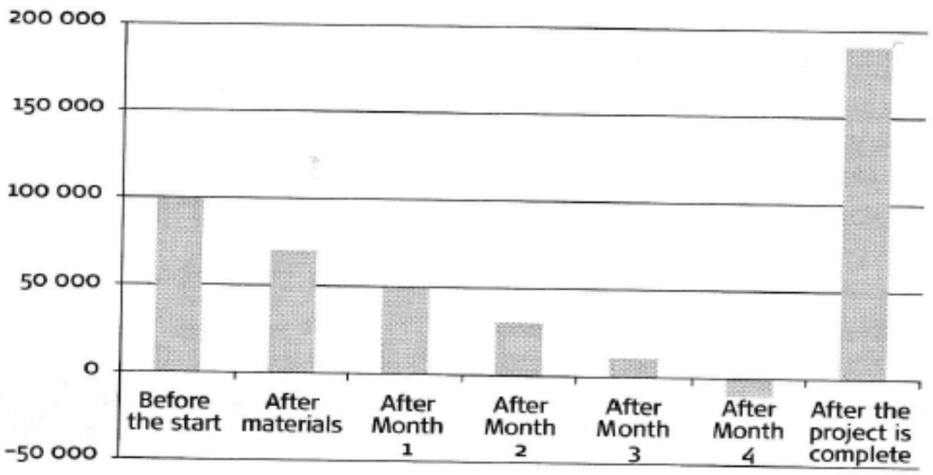

Cash flow	3
Starting balance	1
After materials bought	1
Balance at completion	1

(6)

6.2.2
- He can ask the client to pay for the materials before the job is completed.
- He can ask his bank for an over-draft. (2)

[10]

TOTAL: 100