higher education & training

Department:
Higher Education and Training
REPUBLIC OF SOUTH AFRICA

NATIONAL CERTIFICATE (VOCATIONAL)

PLUMBING
NQF LEVEL 2

(12020162)

22 November 2018 (X-Paper)
09:00–12:00

Candidates will require drawing instruments.

This question paper consists of 6 pages.

NOV

TIME: 3 HOURS
MARKS: 150

INSTRUCTIONS AND INFORMATION

1. Answer ALL the questions.
2. Read ALL the questions carefully.
3. Number the answers according to the numbering system used in this question paper.
4. Start each question on a NEW page.
5. Sketches should be neat, labelled and large enough so that all details can clearly be seen.
6. Write neatly and legibly.

Copyright reserved

QUESTION 1: INTRODUCTION TO PLUMBING

1.1 Describe the term *plumbing*. (2)

1.2 Briefly explain how the ancient Romans brought water from rivers and dams that were far away to areas where it was needed. (2)

1.3 What are the THREE main properties of pure water? (3)

1.4 Give TWO future developments in plumbing industry. (2)

1.5 What is meant by term *water purification*? (1)

1.6 List FIVE stages of water purification. (5)
[15]

QUESTION 2: PLUMBING PRINCIPLES AND CODE OF PRACTICE

2.1 Briefly explain the following terms:

2.1.1 Surface water

2.1.2 Ground water

(2 × 2) (4)

2.2 Name TWO factors that could affect the flow of water through a pipe? (2)

2.3 What is the formula used to calculate the pressure of water at a point? (1)

2.4 Briefly explain the term f*low rate.* (2)

2.5 Briefly describe the scope of the following South African National Standards:

2.5.1 SANS 10252 Part 1

2.5.2 SANS 1O252 Part 2

(2 × 1) (2)

2.6 Differentiate between a *code of practice* and *national standard* in the plumbing industry. (2 × 2) (4)
[15]

Copyright reserved

QUESTION 3: MATERIALS, TOOLS AND EQUIPMENT

3.1 The sketches Below shows the tools that are used in the construction plumbing industry. Write only the name of each tool next to the question number (3.1.1–3.1.2) in the ANSWER BOOK.

3.1.1 

3.1.2 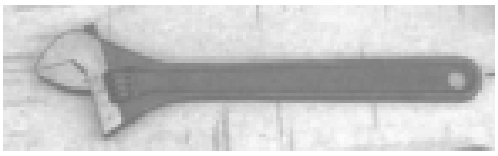

(2 × 1) (2)

3.2 Briefly explain the following terms:

3.2.1 Waste water

3.2.1 Soil water

(2 × 2) (4)

3.3 Give TWO consumable materials you need before you can solder copper pipe together. (2)

3.4 Name TWO types of scaffolds that are commonly used by plumbers. (2)

[10]

QUESTION 4: WATER PIPE ASSEMBLY

4.1 In which THREE ways can the distance between the end of pipe and the first bend be measured? (3)

4.2 Describe the procedure that should be followed when joining two copper pipes using a capillary fitting. (8)

4.3 State THREE classes of copper that you can bend. (3)

4.4 Indicate whether the following statements are TRUE or F ALSE. Choose the answer and write only 'true' or 'false' next to the question number (4.2.1-4.2.5) in the ANSWER BOOK.

4.4.1 Thermoplastics are made with a chemical compound called polymers

4.4.2 PEX piping is a polyethylene – based piping that is made of three layers.

4.4.3 Crimping is a special method used for joining multilayer pipe.

4.4.4 Multilayer pipes are cut with a special cutting tool.

4.4.5 Solvent cement or PVC weld is type of glue used to join copper pipe fitting.

(5 × 1) (5)

4.5 List FOUR methods you can use to bend a multilayer pipe. (4)

4.6 What is the main function of a pipe reamer on a copper cube cutter? (2)
[25]

QUESTION 5: CUTTING AND JOINING OF METALS

5.1 Briefly explain what is meant by the term soakers. (2)

5.2 What is the most common hand tool we use to cut sheet metal? (1)

5.3 Name THREE types of flashing. (3)

5.4 Name TWO methods that can be used to join two sections of thin sheet metal. (2)

5.5 Arc welding rods are coated with a substance called flux.

What is the purpose of this flux? (2)
[10]

QUESTION 6: SET OUT BELOW GROUND DRAINAGE SYSTEMS

6.1 Give TWO main functions of the gully. (2)

6.2 When drains are laid, access points or places are made so that plumbers can get into the pipes when necessary.

Name FOUR places where these access points are made. (4)

6.3 List SIX main points to be considered when laying out a drainage system for a building. (6)

6.4 Briefly explain the following terms:

6.4.1 Sewers

6.4.2 A rising main

6.4.3 Conservancy tanks

(3 × 2) (6)

6.5 Draw neat diagrams of each of the following:

6.5.1 North point

6.5.2 Centre line

6.5.3 Datum level

(3 × 1) (3)

6.6 The drawing below shows a typical trapped gulley. Write only the answer next to the question number (6.6.1–6.6.3) in the ANSWER BOOK.

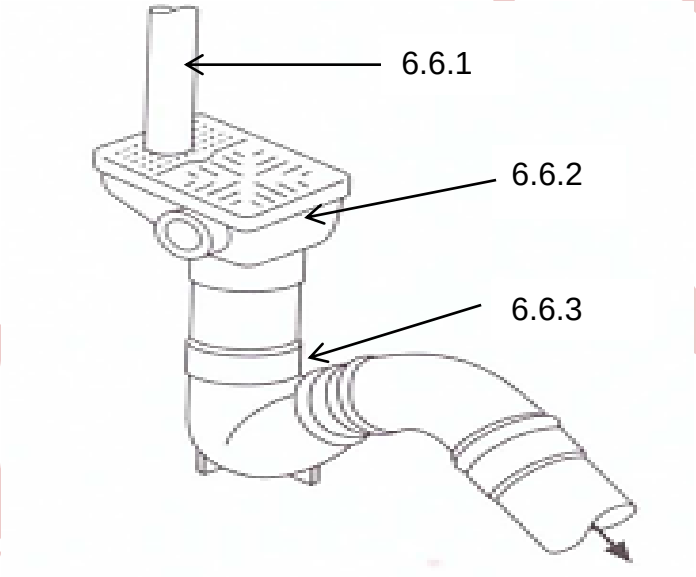

(3 × 1) (3)

6.7 What is the purpose of bedding? (1)

[25]

TOTAL: 100

Copyright reserved