higher education & training

Department:
Higher Education and Training
REPUBLIC OF SOUTH AFRICA

NATIONAL CERTIFICATE (VOCATIONAL)

PLUMBING
NQF LEVEL 2

(12020162)

12 March 2018 (X-Paper)
09:00–12:00

This question paper consists of 6 pages.

Copyright reserved

TIME: 3 HOURS
MARKS: 100

INSTRUCTIONS AND INFORMATION

1. Answer ALL the questions.
2. Read ALL the questions carefully.
3. Number the answers according to the numbering system used in this question paper.
4. Start each question on a NEW page.
5. Sketches should be neat, labelled and large enough so that all details can clearly be seen.
6. Write neatly and legibly.

Copyright reserved

QUESTION 1: INTRODUCTION TO PLUMBING

1.1 Where does the word *plumbing* come from? (2)

1.2 Why were plumbing systems like water-carrying pipes and drains developed? (2)

1.3 Give a brief explanation of the term *water cycle*. (2)

1.4 List THREE steps that water must go through during public water purification. (3)

1.5 Why do we clean water? (1)

1.6 Name TWO types of plumbing in the plumbing industry. (2)

1.7 State THREE roles of a plumbing project manager. (3)

[15]

QUESTION 2: PLUMBING PRINCIPLES AND CODE OF PRACTICE

2.1 There are different sources of water.

What is the water from rivers, dams and lakes called? (1)

2.2 State TWO ways of causing water to flow through a pipe. (2)

2.3 Briefly explain what is meant by the term *friction loss*. (2)

2.4 Give THREE reasons why all plumbers should follow the plumbing industry code of practice. (3)

2.5 Name TWO systems that offer the certificate of approval. (2)

2.6 Which South African National Standard documents and regulations describe and show the standard to follow in order to do drainage systems? (1)

2.7 Briefly explain the difference between a *code of practice* and a *national standard*. (4)

[15]

Copyright reserved

QUESTION 3: MATERIALS, TOOLS AND EQUIPMENT

3.1 Name the tool you would use to do each of the following tasks:

3.1.1 Mark lines when you do measuring and will not be able to rub it off

3.1.2 Assemble GMS pipes and fittings

(2 × 1) (2)

3.2 Name TWO tools that are used to cut sheet metal. (2)

3.3 Name TWO types of sanitary fixtures. (2)

3.4 Describe the difference between *copper capillary fittings* and *brass compression fittings* when joining copper pipes. (2)

3.5 What size and type of pipe is commonly used for underground drainage? (2)

[10]

QUESTION 4: WATER PIPE ASSEMBLY

4.1 The sketches below show galvanised mild-steel pipe fittings used in the plumbing industry.

Name the fittings. Write only the name of the fitting next to the question number (4.1.1–4.1.4) in the ANSWER BOOK.

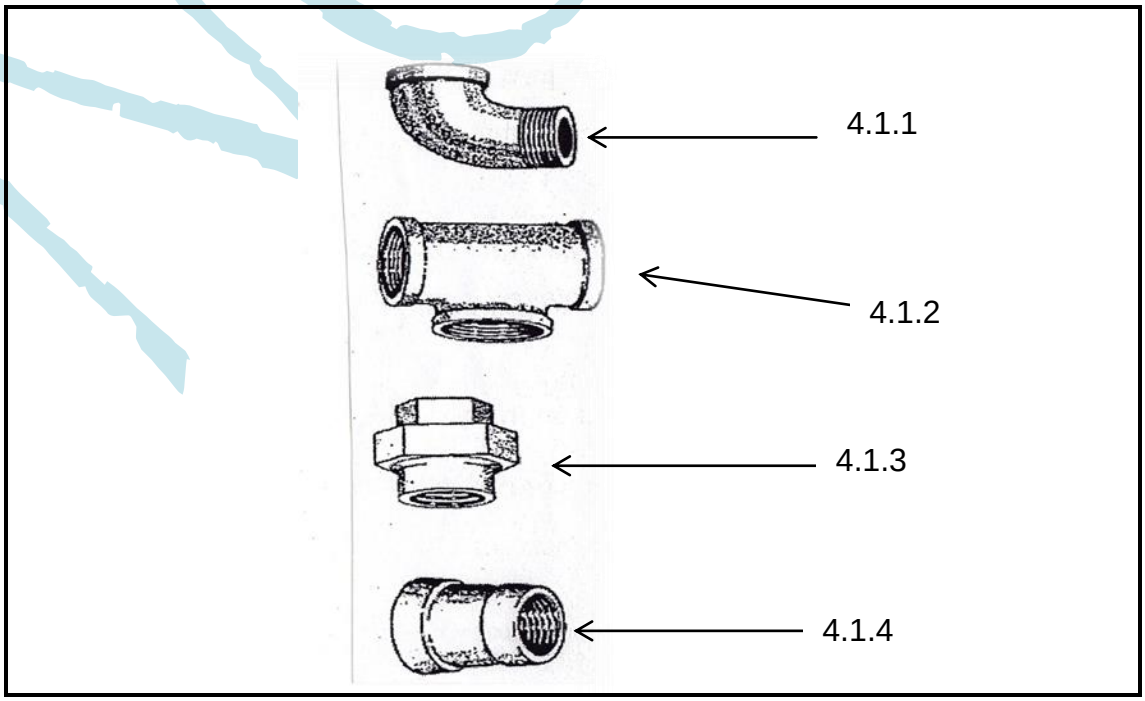

(4 × 1) (4)

4.2 Fully explain the procedure that should be followed when two copper pipes are joined together using a capillary fitting. (10)

4.3 State what each of the following abbreviations stand for:

4.3.1 mPVC

4.3.2 uPVC

4.3.3 HDPE

(3 × 2) (6)

4.4 Which tool should be used to cut a monolayer pipe? (1)

4.5 State FOUR methods used to bend a multilayer pipe. (4)
[25]

QUESTION 5: CUTTING AND JOINING OF METALS

5.1 Briefly explain the term *flashing* and the purpose thereof. (3)

5.2 Name THREE types of flashing. (3)

5.3 Which TWO gases are commonly used for gas welding or brazing? (2)

5.4 When doing gas brazing, a filler rod is used.

What mixture of metals is used in these filler rods? (2)
[10]

QUESTION 6: SET-OUT BELOW GROUND DRAINAGE SYSTEMS

6.1 State SIX main points to consider when laying out a drainage system. (6)

6.2 Describe the term *rodding eye*. (2)

6.3 Briefly explain the following terms:

6.3.1 Manhole

6.3.2 Inspection chamber

6.3.3 French drain

6.3.4 Septic tank

(4 × 2) (8)

Copyright reserved

6.4 Give the meaning of the FIVE symbols below used in plumbing industry. Write only the answer next to the question number (6.4.1–6.4.5) in the ANSWER BOOK.

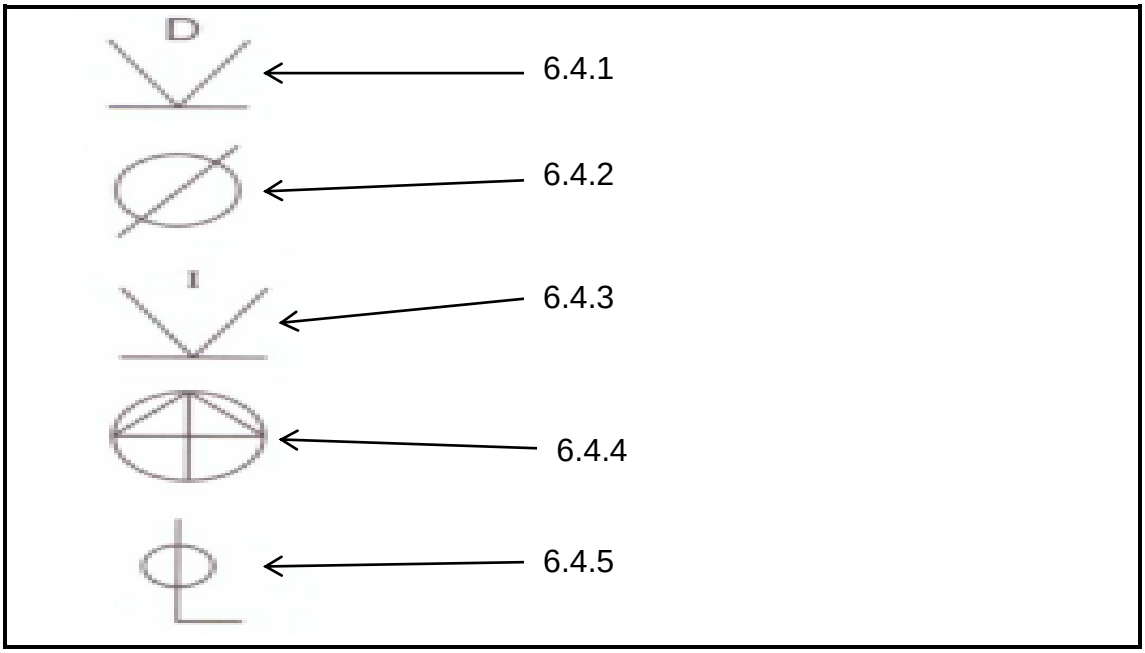

(5 × 1) (5)

6.5 Name THREE types of materials for bedding. (3)

6.6 Explain the term *invert of a pipe*. (1)

[25]

TOTAL: 100

Copyright reserved