higher education & training

Department:
Higher Education and Training
REPUBLIC OF SOUTH AFRICA

NATIONAL CERTIFICATE (VOCATIONAL)

MECHATRONIC SYSTEMS
NQF LEVEL 4

(6040334)

12 March 2018 (Y-Paper)
13:00–16:00

This question paper consists of 6 pages.

Copyright reserved

TIME: 3 HOURS
MARKS: 150

INSTRUCTIONS AND INFORMATION

1. Answer ALL the questions.
2. Read ALL the questions carefully.
3. Number the answers according to the numbering system used in this question paper.
4. All symbols must be drawn according to the IEC standard.
5. Write neatly and legibly.

Copyright reserved

QUESTION 1

You have to design a modification to a pneumatic gravity feeder which normally ejects a workpiece in a straight line onto a conveyor belt as shown in FIGURE 1A.

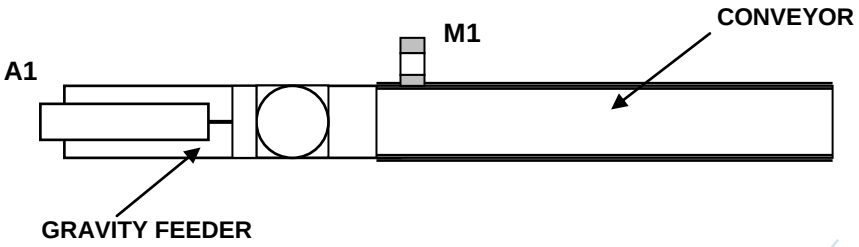

FIGURE 1A

The system must be modified to eject the workpiece at 90 º onto the conveyor belt system as shown in a FIGURE 1B.

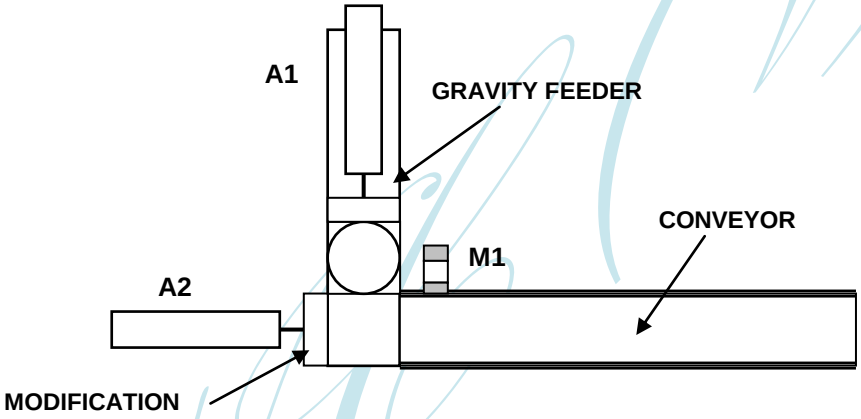

FIGURE 1B

An additional pneumatic cylinder must be used to eject the workpiece at 90º to the conveyor belt and the control must be incorporated into the existing PLC application program.

1.1 Explain the purpose of a *design brief*. (2)

1.2 List FOUR objectives that a design brief must meet. (4)

1.3 Write a design brief according to its objectives for the design modification above. (4)

[10]

Copyright reserved

QUESTION 2

2.1 Explain the purpose of a *spider diagram* used to determine the material requirements of a project. (2)

2.2 Draw a spider diagram that will help represent the materials and services required to perform the modification required in QUESTION 1. (8)

2.3 Explain the purpose of *brainstorming a solution* in a design project. (2)

2.4 Study the design information and diagrams in QUESTION 1.

Draw the systems diagram of the modified gravity feeder with a 90º workpiece ejection. (8)

2.5 What is meant by the term *specification*? (1)

2.6 Explain the difference between an *assembly drawing* and that of a *part drawing*. (4)

[25]

QUESTION 3

3.1 Explain what is meant by *planning.* (3)

3.2 List the THREE elements of an action plan. (3)

3.3 Explain what is meant by *cycle time.* (2)

Copyright reserved

3.4 FIGURE 2 below represents an original control program before modifications.

Write the modified sequence program that will enable the new ejecting pneumatic cylinder to be controlled by the PLC.

NOTE: Only the section of the new solenoid control of the new ejector cylinder needs to be shown.

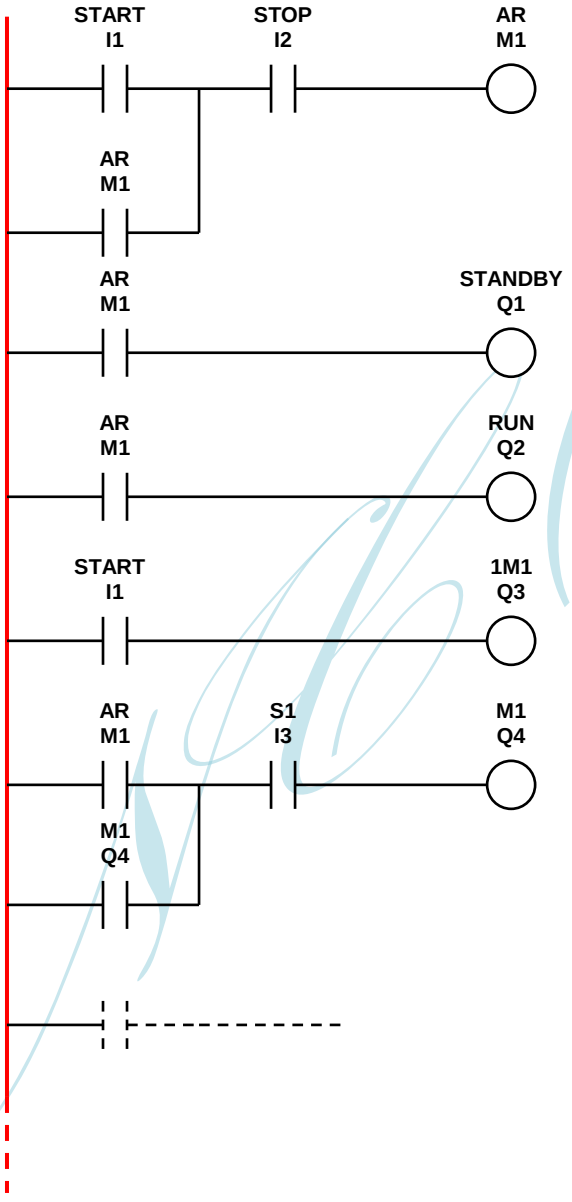

FIGURE 2 (6)

Copyright reserved

3.5 Compile the time chart that has a start date (today) and a completion date for the various stages of the ejector modification.

- Design concept 1 week
- Documentation 2 weeks
- Purchases 1 week
- Manufacture 2 weeks
- Testing and commissioning 1 week (10)

3.6 List SIX manufacturing processes you will encounter when making the modification to the gravity feeder system. (6)
[30]

QUESTION 4

4.1 Briefly discuss the commissioning process of the modified gravity feeder. (4)

4.2 Explain the *functional performance test*. (2)

4.3 Draw up a simplified checklist for a factory performance test of the modified gravity feeder. (8)

4.4 The objective of commissioning is to bring the system into production without any risks.

Name ONE of these risks. (1)
[15]

QUESTION 5

5.1 Draw up a maintenance schedule to use with the modified gravity feeder. (6)

5.2 Briefly explain how you would test the inputs to the PLC system during scheduled maintenance. (6)

5.3 List THREE maintenance activities you would carry out when maintaining sensors. (3)

5.4 Draw up the index page of the technical manual related to the modification that you made to the gravity feeder. (5)
[20]

TOTAL: 100

Copyright reserved