higher education & training

Department:
Higher Education and Training
REPUBLIC OF SOUTH AFRICA

MARKING GUIDELINE

NATIONAL CERTIFICATE (VOCATIONAL)

MECHATRONIC SYSTEMS
NQF LEVEL 4

XX February 2020

This marking guideline consists of 8 pages.

Copyright reserved

QUESTION 1

1.1 Working as part of a project team entails that you and your team performs a specific subtask that will be integrated into a mechatronic system to meet the outcomes of the design brief. (2)

1.2
- Project manager
- Electrical engineer
- Mechanical engineer
- IT-engineer
- PLC Programmer
- Drawing office/CAD/CAM specialist (Any 2 × 1) (2)

1.3

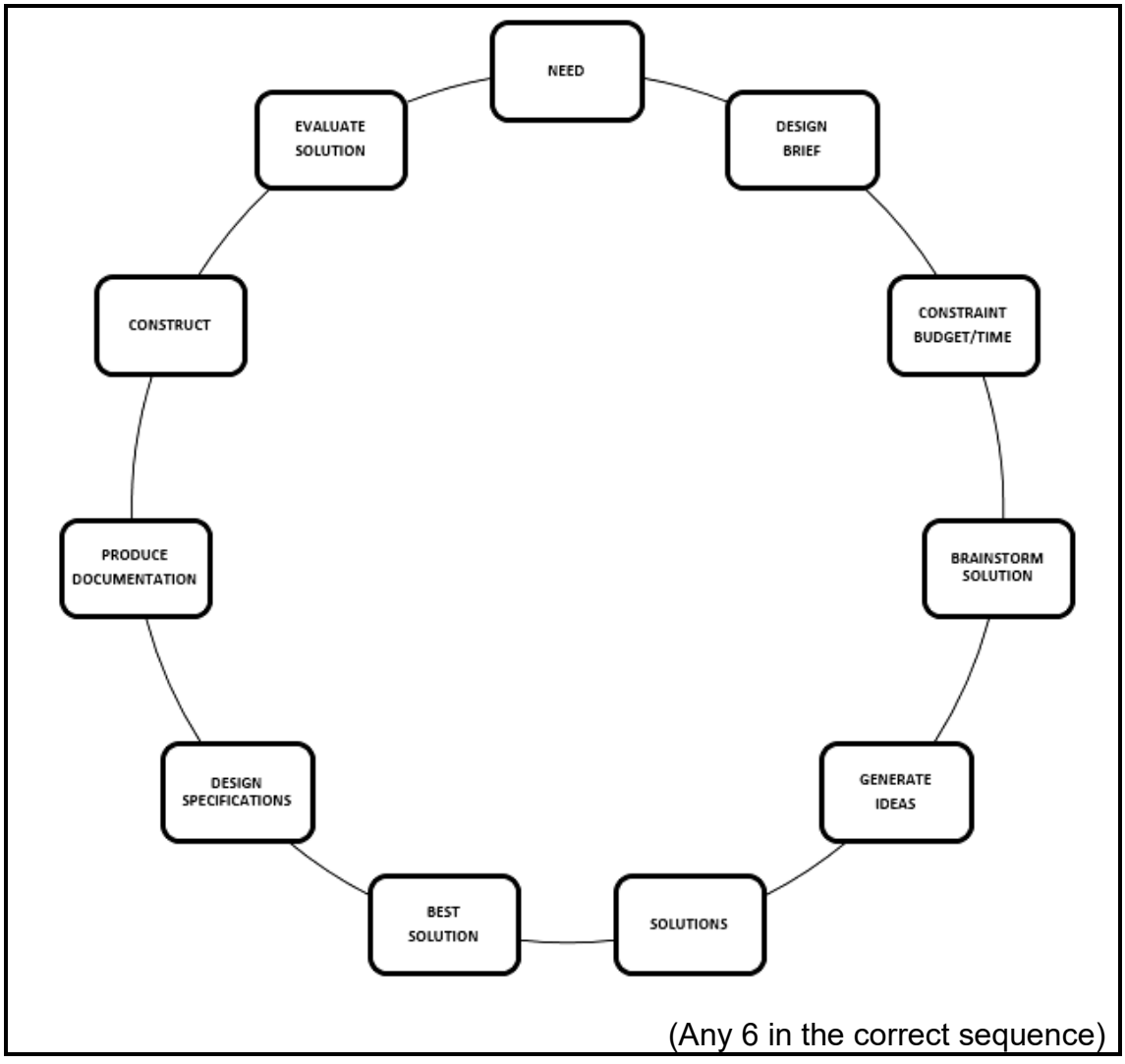

(Any 6 in the correct sequence) (6)

[10]

QUESTION 2

2.1 Research enables one to formulate the best ideas ✓to meet the design brief and specification needs. ✓ (2)

2.2
- Operator manuals
- Magazines
- Focus groups
- Internet (blogs)
- Catalogues
- Asking related questions
- Word of mouth (Any 4 × 1) (4)

2.3 There are different subsystems/components✓ that may be required using different machine standards✓ and various forms of specialisation.✓ (3)

2.4

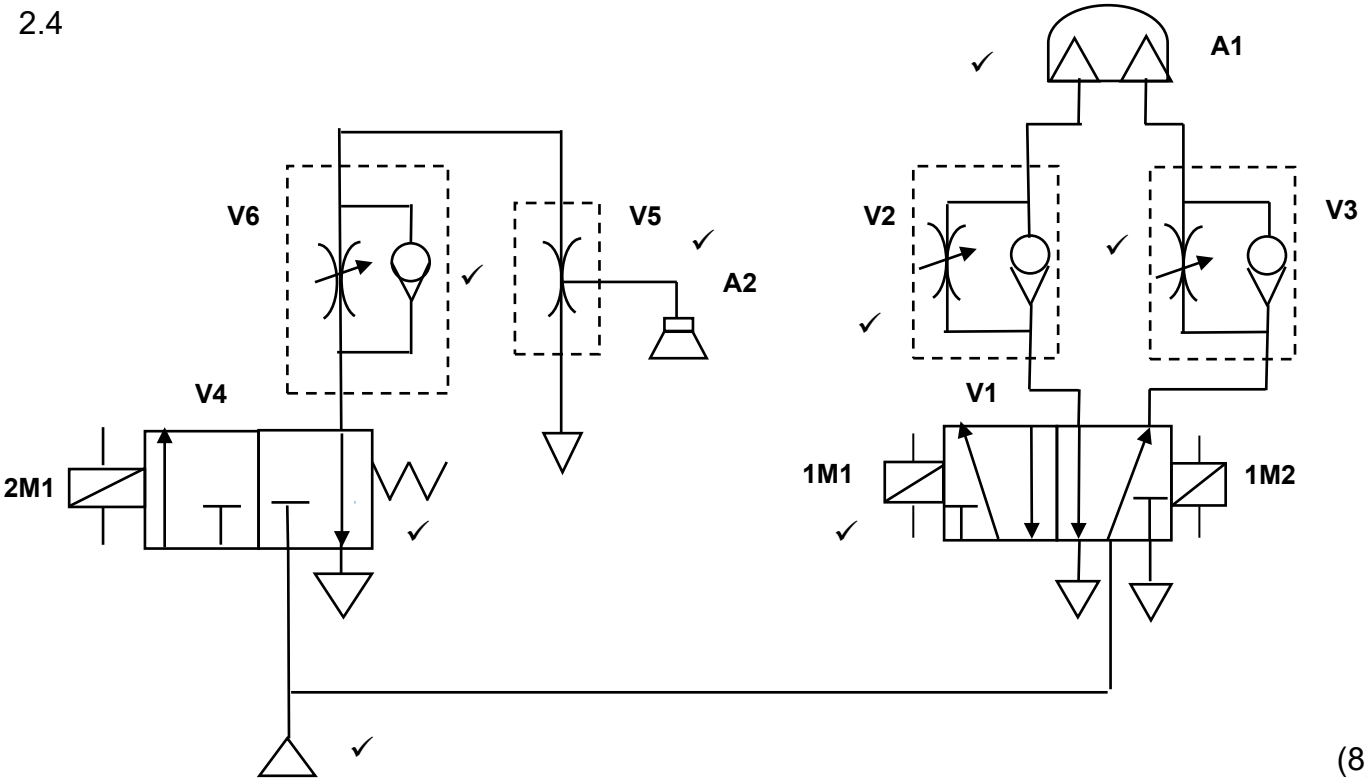

(8)

2.5

ITEM	DESCRIPTION	MARKING	FUNCTION
1	**Double-acting 5/2 way solenoid valve**	**V1**	**Manages the motion of A1**
2	**Single-acting 3/2 way solenoid valve**	**V4**	**Manages the vacuum gripper A2**
3	**Vacuum generator**	**V5**	**Produces the vacuum**
4	**Flow-control valve**	**V2**	**Manages the airflow**
5	**Flow-control valve**	**V3**	**Manages the flow**
6	**Flow-control valve**	**V6**	**Manages the flow**
7	**Semirotary 180° pneumatic motor**	**A1**	**Produces the rotary motion**
8	**Vacuum gripper**	**A2**	**Picks up the workpiece**
9	**Tubing**		**Produces the flow path**

(8)

(Any 8 items one mark per item) **[25]**

QUESTION 3

3.1 Ensures that the design, manufacture and commissioning run ✓ smoothly within the budget and allocated time frames.✓ (2)

3.2 A flow chart can indicate who is doing what ✓ and what is to be completed in a sequence of steps with reference to the time allocated. ✓ (2)

3.3

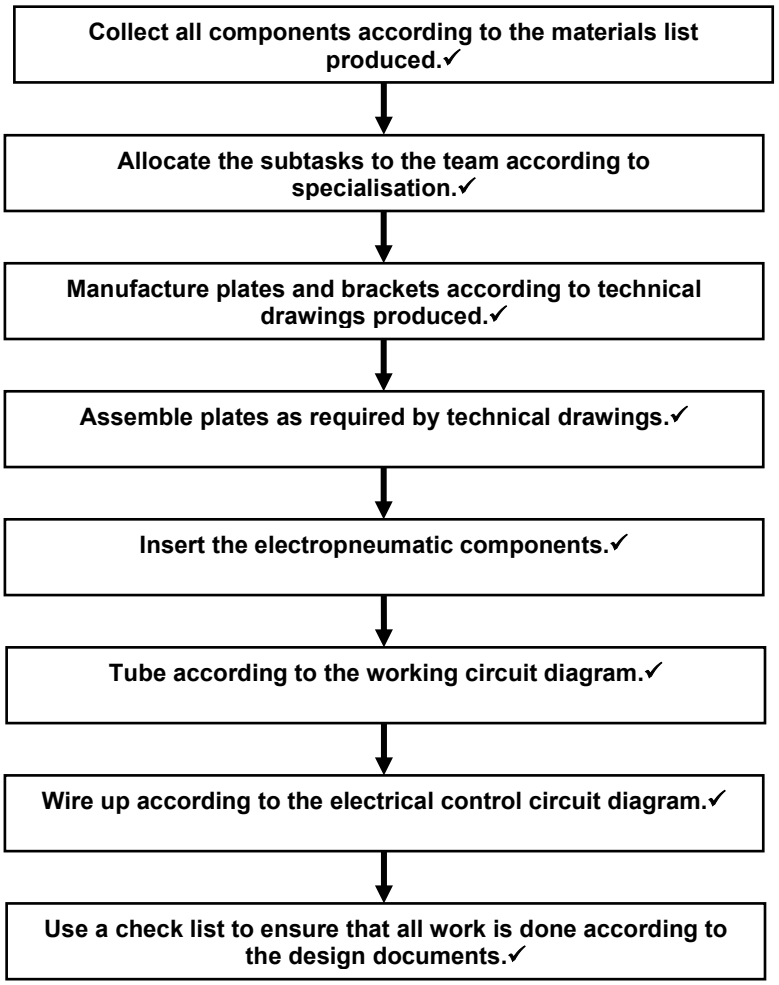

(2 for arrows + 8 × 1) (10)

3.4

TASK	WEEK 1	WEEK 2	WEEK 3	WEEK 4	WEEK 5
COLLECT MATERIALS					
ALLOCATE SUBTASKS					
MANUFACTURE PLATES					
ASSEMBLE COMPONENTS					
INSTALL ELECTRO-PNEUMATIC COMPONENTS					
INSTALL TUBING					
INSTALL CONNECTING WIRE					
USE INSTALLATION CHECKLIST					

✓ ✓ ✓ ✓ ✓ ✓ ✓ ✓ ✓

(Or any other realistic schedule) (1 for correct labelling + 9 × 1) (10)

3.5

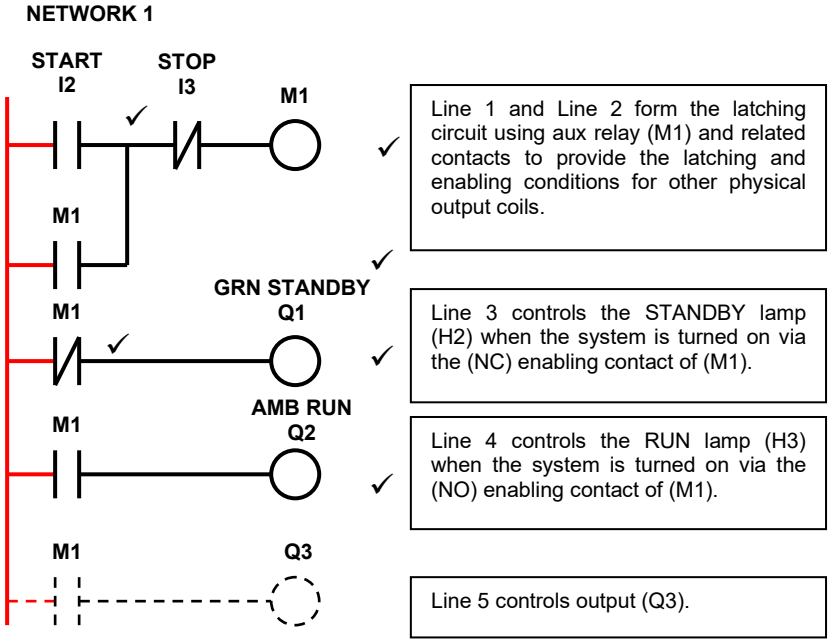

(6)
[30]

QUESTION 4

4.1 All machine manufacturers/designers must ensure machine safety for the various subfields used as required by the machine standards ✓of global safety requirements so as prevent loss of life, injury to persons ✓ and damage to the machine. (2)

4.2

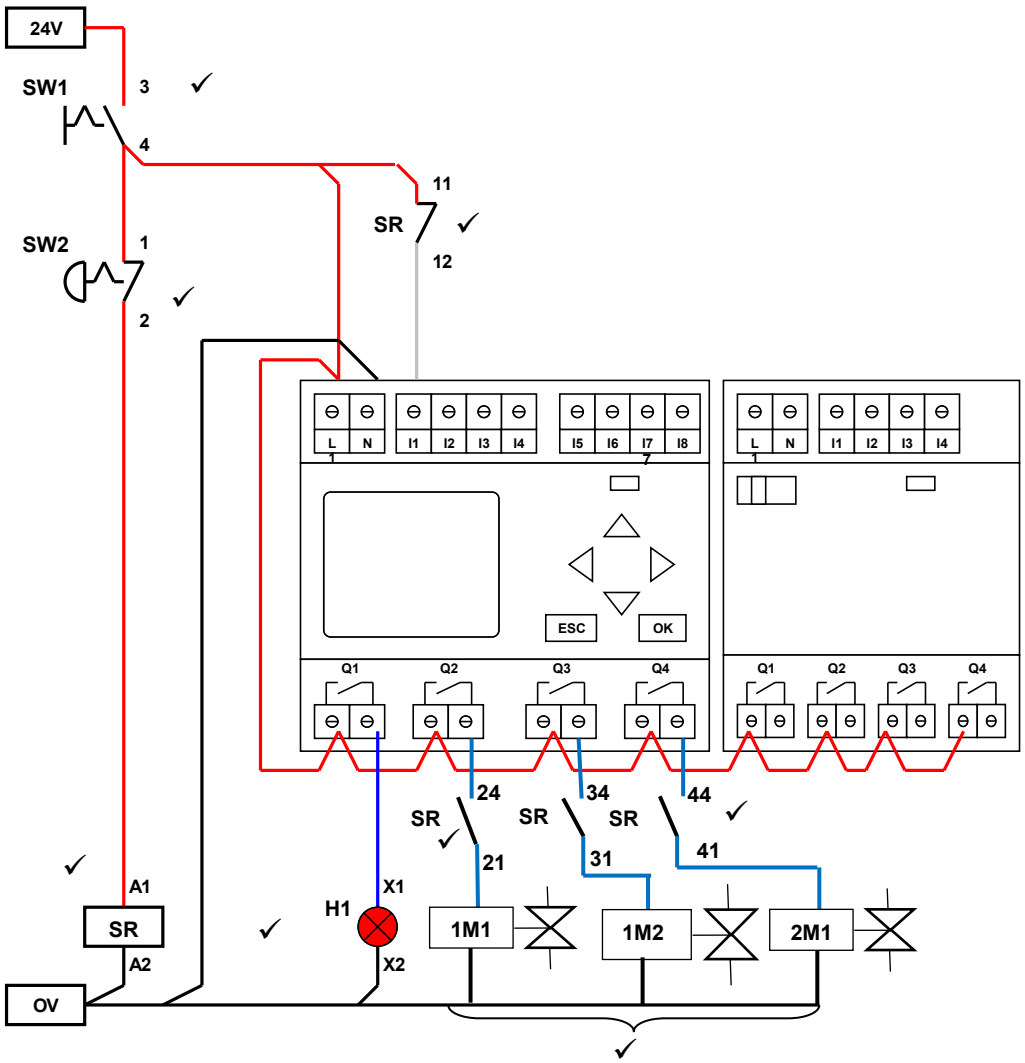

(8)

4.3 Debugging PLC-ladder source code in the design stage requires a program to be compiled ✓ and checked for syntax and logic line by line. ✓ (2)

4.4
- Remove the supply from the output actuators and drives.
- Activate the input device (push button/sensor) and check if the input LED illuminates.
- If YES the input is operational.
- If NO the wiring and input device must be checked. (Any 3 × 1) (3)

[15]

QUESTION 5

5.1 By adjusting the luminance intensity ✓ on the sensor to detect a specific coloured workpiece. ✓ (2)

5.2 Technical documentation such as:
- Manufacturer's instructions
- History of previous malfunctions
- Schedules
- Time in operation/use (4)

5.3 Error analysis is the process of analysing the system for any possible errors✓ that may cause a malfunction. ✓ Error correction refers to the steps taken ✓ to fix the cause of the error. ✓ (2 + 2) (4)

5.4

ITEM	DESCRIPTION OF SAFETY TEST	YES	NO	N/A	
1	Is the control voltage correct (24 VDC)?				✓
2	Is the air pressure correct (6-8 bar)?				✓
3	Are all tube connections tight?				✓
4	Is there air leakage (damaged tubing)?				✓
5	Is there stress on tubing or wiring during motion?				✓
6	Is there pinching of tubing or wiring during motion?				✓
7	Are all tubing or wiring secured at 50 mm intervals?				✓
8	Is E/stop operational applicable?				✓
9	Is two-handed control operational if applicable?				✓
10	Is safety curtain/gate operational if applicable?				✓
COMMENTS:					

(10)
[20]

TOTAL: 100

Copyright reserved