higher education & training

Department:
Higher Education and Training
REPUBLIC OF SOUTH AFRICA

MARKING GUIDELINE

NATIONAL CERTIFICATE (VOCATIONAL)

MECHATRONIC SYSTEMS
NQF LEVEL 3

7 December 2020

This marking guideline consists of 6 pages.

Copyright reserved

QUESTION 1

1.1

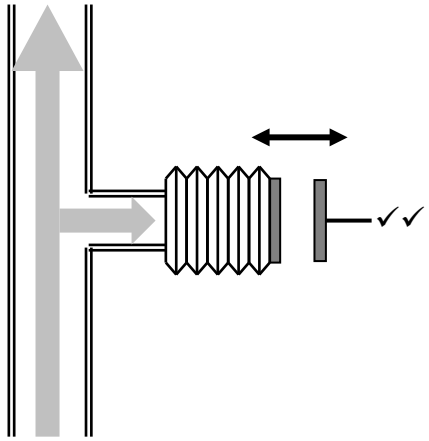

As the pressure in the pipe changes✓ it will cause the plates of the capacitor to move in and out✓ resulting in the dielectric strength changing the capacitive value fed to the amplifier circuit.✓ (5)

1.2

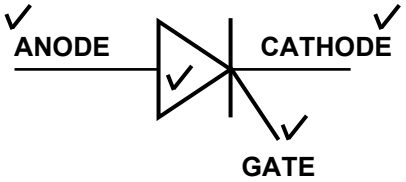

(4)

1.3 A monostable multivibrator has one stable state.✓ The circuit will flip into the unstable state for a determined period, but will eventually return to the stable state.✓ Such circuit is useful for creating a timing period of fixed duration in response to some external event.✓ (3)

1.4 Eliminating switch bounce (1)

1.5 Telemetering is defined as signal transmission over a considerable distance.✓ In measurement applications this means that the signal detected is transferred from the transducer, known as a transmitter, to a remote station known as a receiver.✓ Telemetering is normally achieved using radio frequency.✓ (3)

1.6 By switching the phase control OFF and ON and the cycle control ON or OFF for longer periods (2)

[18]

QUESTION 2

2.1 Single-axis control (1)

2.2 Absolute encoders are used to measure angular position.✓ Depending on its resolution or accuracy✓ each angular position of the motor shaft will produce a specific output signal.✓ Incremental encoders output pulses at regular angular intervals of the motor shaft position.✓ When the motor speeds up,✓ the incremental encoder outputs pulses more often.✓ (3 + 3) (6)

2.3

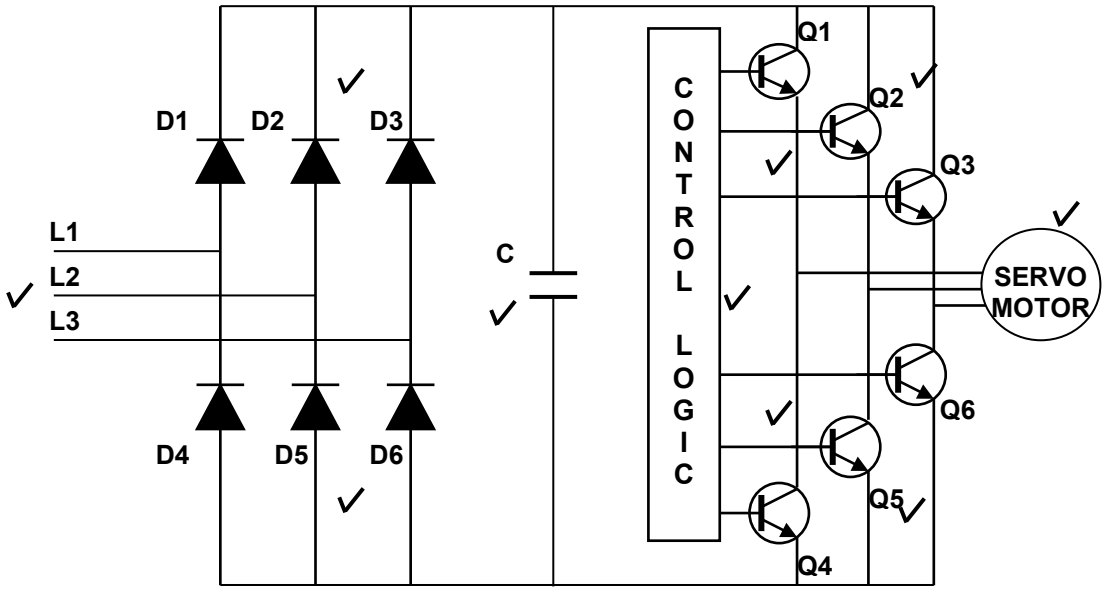

(10)

2.4
- Achieves high speed at high torque values
- Quiet at high speeds
- Accuracy and resolution determined by encoder
- Rapidly accelerates loads
- Encoder utilisation provides higher accuracy and resolution with closed-loop control
- High efficiency up to 90% with light loads (Any 4 × 1) (4)

[21]

QUESTION 3

3.1 The potential energy created at point A is low✓ due to the small distance of the outlet from the top of the tank and therefore less pressure is created.✓ The potential energy created at point B is higher✓ due to the larger distance of the outlet from the top of the tank and therefore more pressure is created.✓ (4)

3.2

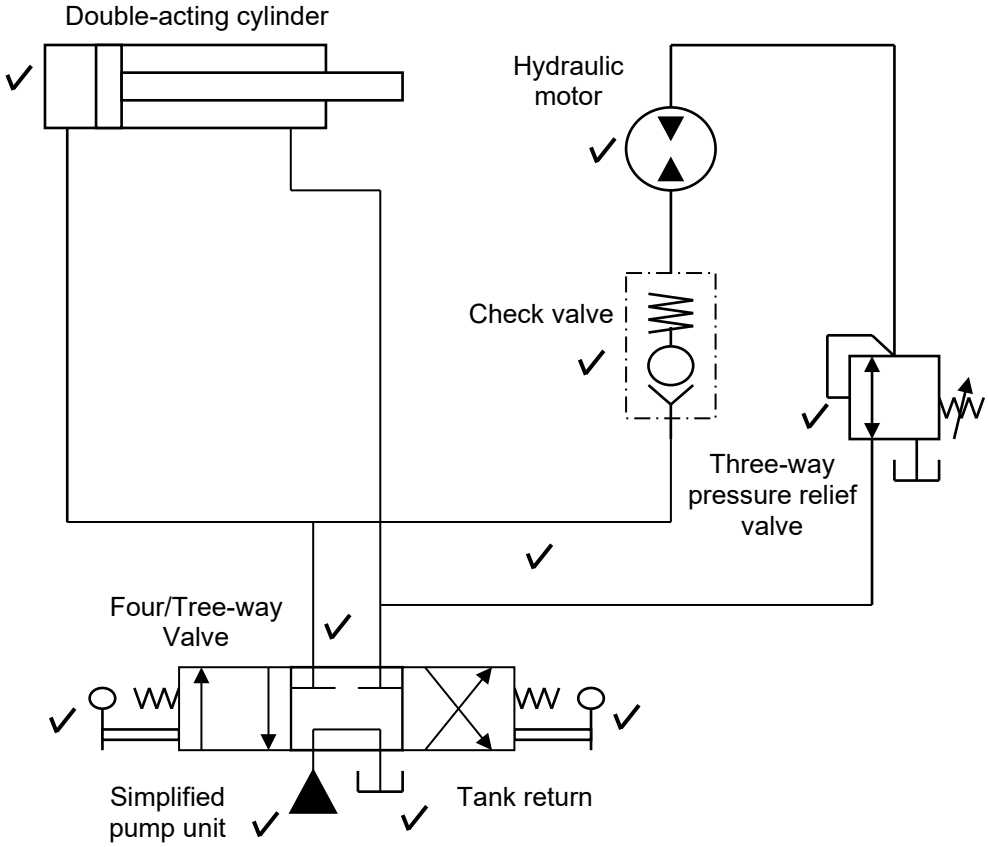

(Marks only awarded for correctly connected units) (10)

3.3
- Ideal viscosity
- Good lubrication
- Low volatility
- Low density
- Low toxicity
- Environmental and chemical stability
- High degree of incompressibility
- Fire resistance
- Good heat transfer
- Foaming resistant (Any 6 × 1) (6)

[20]

QUESTION 4

4.1 Control is the process where a group of elements are connected together to govern the power delivered to an application.

OR

It is the switching action of a toggle switch to a hardwired complex network of elements or to a hybrid microprocessor software-controlled application. (3)

4.2
- Cooling of a spot-welding gun attached to an industrial robot
- Pumping glue to a glue gun
- Pressing body parts
- Plastic processing machinery
- Steel making
- Primary metal-extraction applications
- Automated production lines
- Machine-tool industry
- Paper industries
- Loaders
- Crushers
- Presses
- Textile industries (Any 2 × 1) (2)

4.3

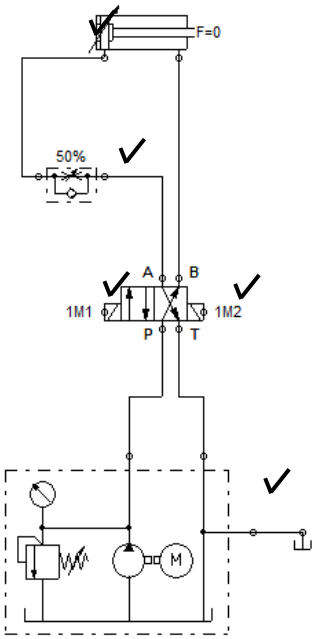

4.3.1

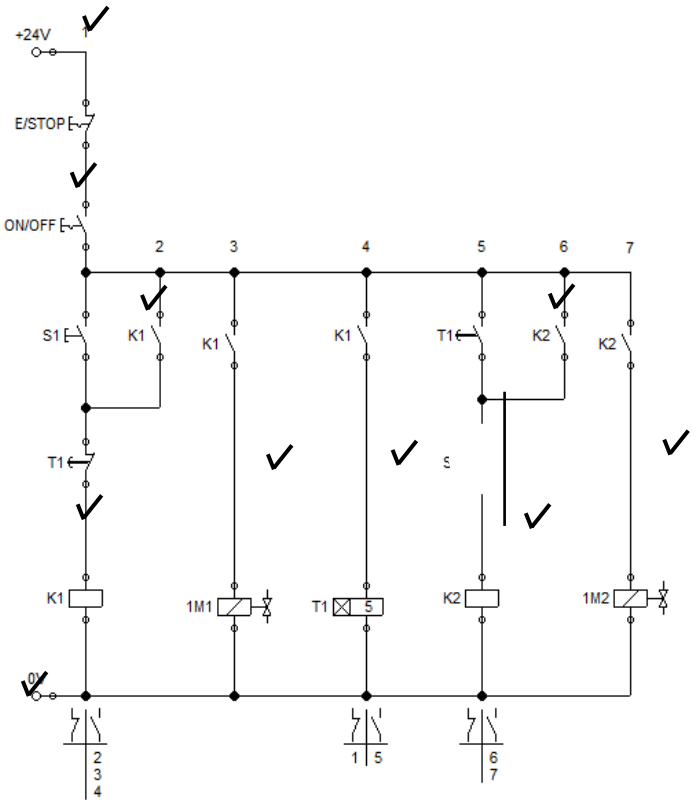

4.3.2

(5 + 10) (15)
[20]

QUESTION 5

5.1 5.1.1
- Oil level in tank
- Pressure
- Power to the hydraulic pack
- Check if valves are open/operating (Any 2 × 1) (2)

5.1.2
- Clogged and dirty filters
- Not enough oil in the reservoir
- Leaking seals
- Loose inlet lines
- Incorrect oil type
- Excessive oil temperatures
- Excessive oil pressure (Any 3 × 1) (3)

5.2 A short circuit is an electrical circuit that allows a current to travel along an unintended path✓ with no or very low electrical impedance✓ whereas an open circuit is an infinite resistance between two nodes.✓ The wires are cut off✓ so there will be no current flow but there is voltage.✓ (5)

5.3 Use the voltmeter test through the circuit by connecting the negative test lead to the negative reference point✓ with the positive test lead and all the switches closed✓ through the positive section of the circuit.✓ If no fault is found, connect the positive lead to a positive reference point✓ and then test with the negative lead through the negative part of the circuit.✓ (5)

5.4 5.4.1
- No supply voltage
- SW1 malfunctioning
- SW2 malfunctioning
- K1 relay faulty
- Either one of the K1 contacts malfunctioning
- Valve solenoid malfunctioning (open circuit) (Any 3 × 1) (3)

5.4.2
- Returned spring faulty
- Faulty hydraulic pump
- Cylinder malfunctioning
- Pipes clogged up, leaking or kink in the pipe
- Returned flow is blocked (Any 3 × 1) (3)

[21]

TOTAL: 100

Copyright reserved