higher education & training

Department:
Higher Education and Training
REPUBLIC OF SOUTH AFRICA

NATIONAL CERTIFICATE (VOCATIONAL)

MECHATRONIC SYSTEMS
NQF LEVEL 3

(6040213)

10 March 2020 (X-Paper)
09:00–12:00

This question paper consists of 6 pages.

399Q1S2010

Copyright reserved

TIME: 3 HOURS
MARKS: 100

INSTRUCTIONS AND INFORMATION

1. Read ALL the questions carefully.
2. Answer ALL the questions.
3. Number the answers according to the numbering system used in this question paper.
4. Start each question on a NEW page.
5. Draw neat, labelled sketches.
6. Use IEC symbols drawn to standard.
7. Write neatly and legibly.

Copyright reserved

QUESTION 1

1.1 What do the following statements refer to?

1.1.1 A control technique that compares a feedback signal representative of an actual value with a desired value and responds to minimise the error.

1.1.2 An input to a system that can continuously vary over a range of current or voltage, such as 4 to 20 milliamps or 0 to 10 volts.

1.1.3 A device that converts energy from one form to another. It often refers to sensing devices used to monitor or control a process.

(3 × 1) (3)

1.2 List FOUR control components to consider when designing a mechatronic subsystem. (4)

1.3 Give the FOUR main components of a control loop in most control systems found in automated control processes. (4)

1.4 Draw the block diagram of a closed loop controller, which shows the signal flow indicating the components mentioned in QUESTION 1.3. (9)

[20]

QUESTION 2

Study FIGURE 1 of a motor application using a controller for control and answer the questions.

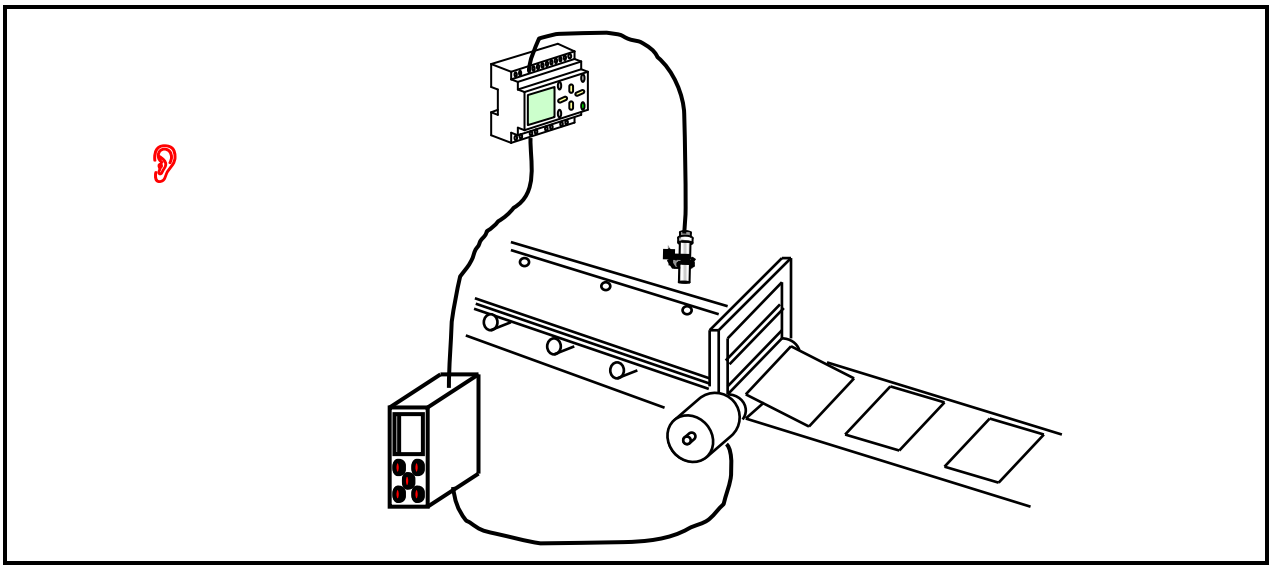

FIGURE 1

2.1 Explain the operation of the application depicted in FIGURE 1. (4)

2.2 Draw the characteristic curve that will show the starting, stopping and deceleration of the controller controlled application shown in FIGURE 1. (9)

2.3 Identify the kind of motion that will be achieved on the final output of the conveyor belt? (1)

2.4 Identify the type of drive (motor) that should be used to achieve the characteristic curve in FIGURE 1? (2)

2.5 Explain the purpose of the sensor in the application shown in FIGURE 1. (2)

2.6 Name TWO controlled tools used in mechatronic processes. (2)
[20]

Copyright reserved

QUESTION 3

3.1 Explain what each of the following related hydraulic terms mean:

3.1.1 Accumulator

3.1.2 Actuator

3.1.3 Cylinder

(3 × 2) (6)

3.2 List the THREE components of working knowledge required when working with hydraulics. (3)

3.3 Study FIGURE 2 of a guillotine using two cylinders with the following operational instructions:

Two cylinders are connected together by the press crossover piece. It is required that the two cylinders operate evenly at the same time. The pressure must be adjustable to suit the type of material used. A pressure compensated flow control valve must be used for the return motion.

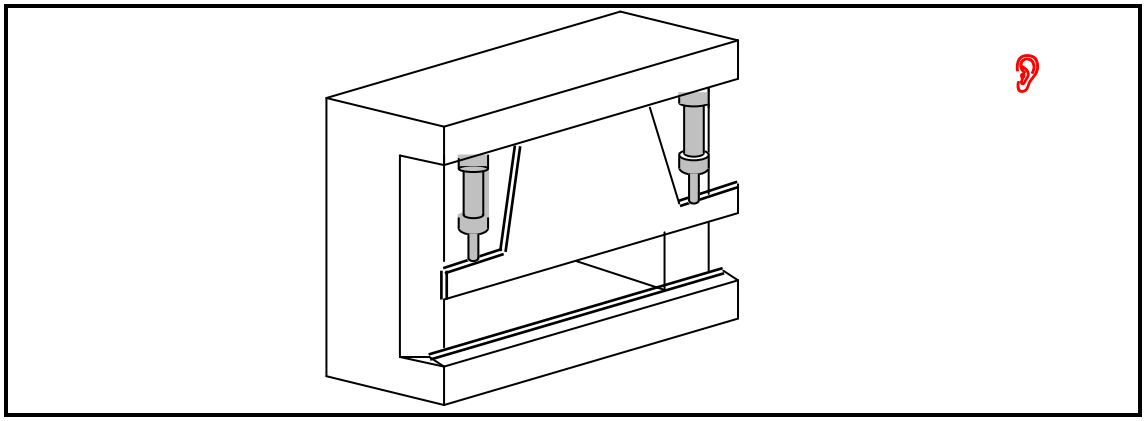

FIGURE 2

Answer the following related components:

3.3.1 Draw a fully labelled hydraulic working circuit using IEC symbols for the application shown in FIGURE 2. (10)

3.3.2 Identify the gate function of the valve used to ensure that both cylinders operate at the same time? (1)

[20]

QUESTION 4

4.1 Define the term *solenoid valve.* (2)

4.2 Draw the labelled IEC symbol of a hydraulic solenoid valve. (2)

4.3 Is the solenoid valve an input to a PLC or an output from the PLC? (2)

4.4 List the THREE parts of the control section of an electro-hydraulic application. (3)

4.5 Draw a block diagram indicating how a 24 V DC control signal will be achieved from a 220 V AC control voltage. (9)

4.6 Explain the difference between *relay* and *contactor designation*/*markings* used in mechatronics. (2)

[20]

QUESTION 5

5.1 Explain each of the following terms:

5.1.1 Fault

5.1.2 Troubleshooting

5.1.3 Checking

(3 × 2) (6)

5.2 Explain the difference between *cause* and *effect* when clearing a fault. (2 × 2) (4)

5.3 Draw a sketch indicating how you would use a continuity tester to check a cable for continuity. (4)

5.4 Draw a sketch indicating how a voltmeter would be used to check a simple series circuit. (6)

[20]

TOTAL: 100

Copyright reserved