higher education & training

Department:
Higher Education and Training
REPUBLIC OF SOUTH AFRICA

MARKING GUIDELINE

NATIONAL CERTIFICATE (VOCATIONAL)

MECHATRONIC SYSTEMS
NQF LEVEL 3

10 March 2020

This marking guideline consists of 6 pages.

Copyright reserved

QUESTION 1

1.1 1.1.1 Closed loop control
1.1.2 Analogue input
1.1.3 Transducer

(3 × 1) (3)

1.2
- Mechanical components (sensors, frames and gears)
- Electrical components (motors, power electronics and filters)
- Computer components (microcontrollers, data acquisition and embedded systems)
- Software components (simulation and control algorithms) (4 × 1) (4)

1.3
- A measurement of the state or condition of the process
- A controller that calculates an action based on the measured value against that of a preset value known as the set-point (SP)
- An output signal resulting from the controller calculation used to manipulate (MV) the process action through some form of actuator
- The process itself reacting to the signal in changing its state or condition (4)

1.4

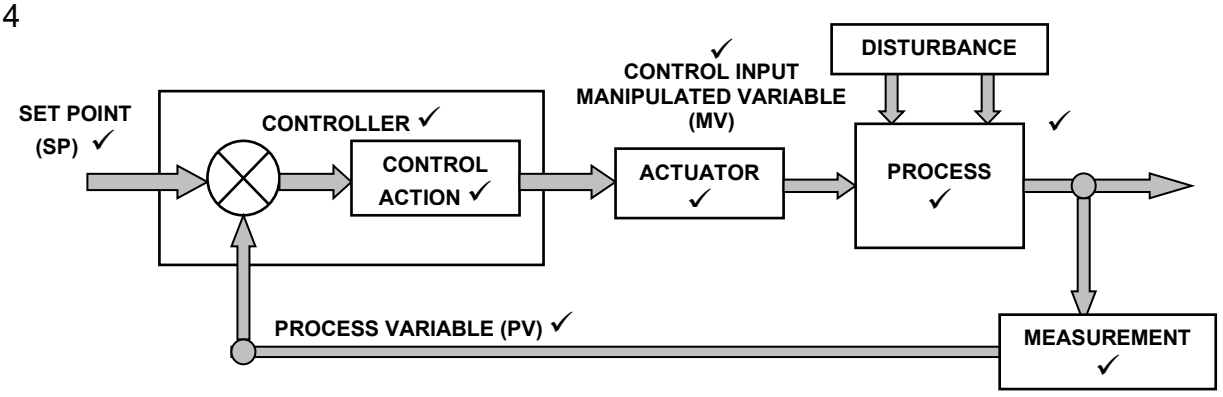

(9 × 1) (9)

[20]

QUESTION 2

2.1 A sensor, connected to a PLC input,✓ is used to detect a reference mark on the roll. An AC or DC drive controller, controlled by the PLC, is used to control the acceleration, deceleration and speed of an electric motor.✓ The motor drives a belt that feeds the roll through a cutter.✓ When the sensor detects the reference mark, it changes the state of the PLC input.✓

(Marker to use discretion) (4)

2.2

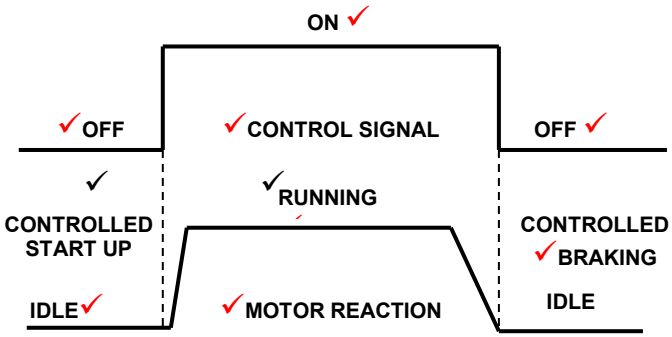

(9 × 1) (9)

2.3 Linear (1)

2.4 Stepper or servo drives (2)

2.5 To detect the presence of the material to be cut✓ and then send the signal to the controller to stop the conveyor and start the cutting process✓ (2)

2.6 Industrial robots✓ and CNC machines✓ (Marker to use discretion) (2)

[20]

QUESTION 3

3.1 3.1.1 A device for storing fluid under pressure. It usually consists of a chamber separated into a gas compartment and a liquid compartment by a piston or diaphragm. An accumulator also serves to smooth out pressure surges in a hydraulic system.

(Marker to use discretion)

3.1.2 A device that converts fluid power into mechanical force and motion, such as a cylinder. (Marker to use discretion)

3.1.3 A device that converts fluid power into linear mechanical force and motion. It usually consists of a movable element, such as a piston and piston rod, plunger or ram, operating within a cylindrical bore.

(Marker to use discretion) (3 × 2) (6)

3.2
- Knowledge of physical quantities and units used in hydraulics
- Knowledge of the basic physical laws of hydrostatics and hydrodynamics
- Knowledge of hydraulic equipment and its related operation as used in hydraulic control applications (3 × 1) (3)

3.3 3.3.1

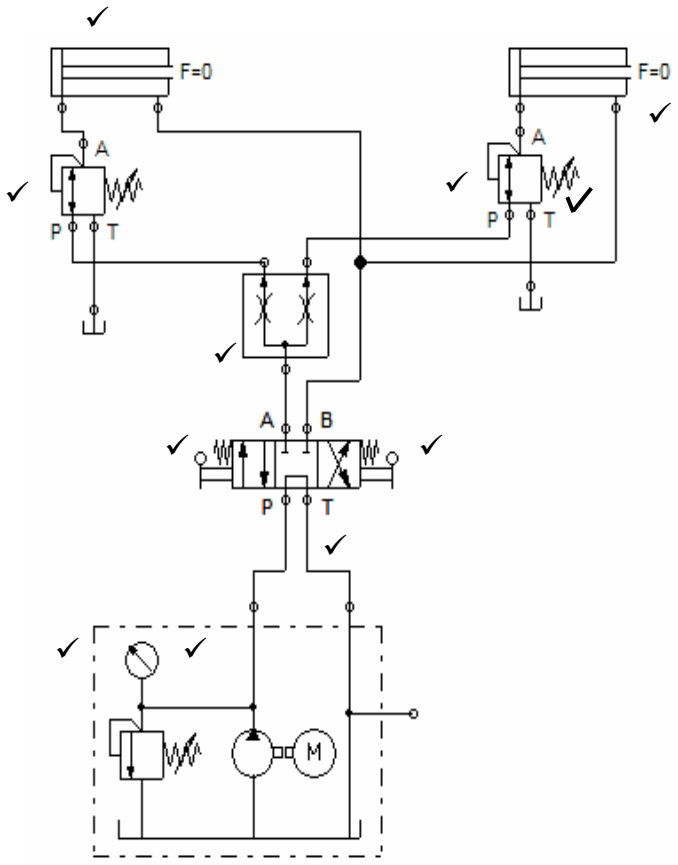

(10 × 1) (10)

3.3.2 AND function (1)
[20]

QUESTION 4

4.1 An electromagnetic valve controlled by a remote electric signal that will enable fluid flow. (Marker to use discretion) (2)

4.2

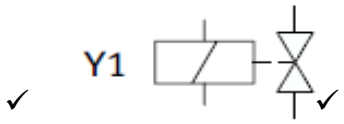

(2)

4.3 An output from the PLC (2)

4.4
- Control energy source
- Signal input device
- Signal processing circuit (3)

4.5

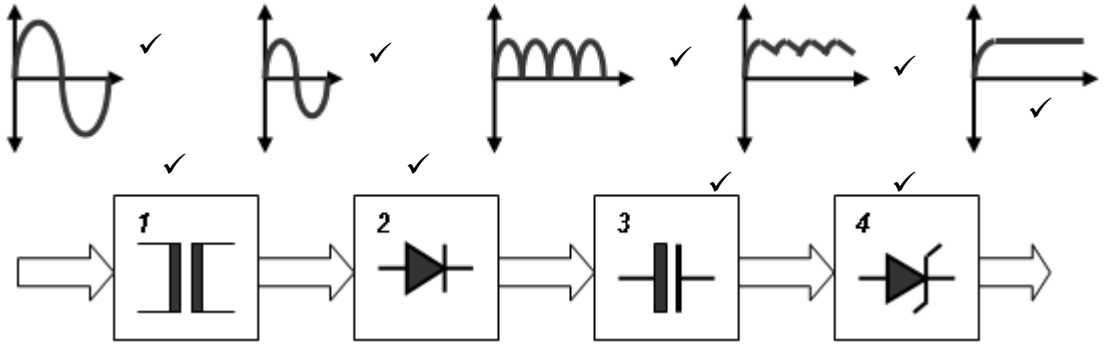

(9 × 1) (9)

4.6 A relay is designated by an 'R' and the contactor is designated by a 'K' in mechatronics. (2)

[20]

QUESTION 5

5.1 5.1.1 A fault is a condition where at least one component has failed and the operation of the system has stopped.

5.1.2 To systematically isolate and eliminate faults

5.1.3 When operating or controlling, quantities are checked for compliance

(3 × 2) (6)

5.2 Cause: The condition that enables the initial failure
Effect: The result due to the cause of the failure (2 × 2) (4)

5.3

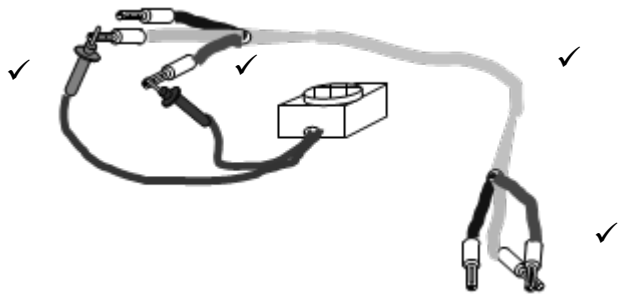

(4 × 1) (4)

5.4

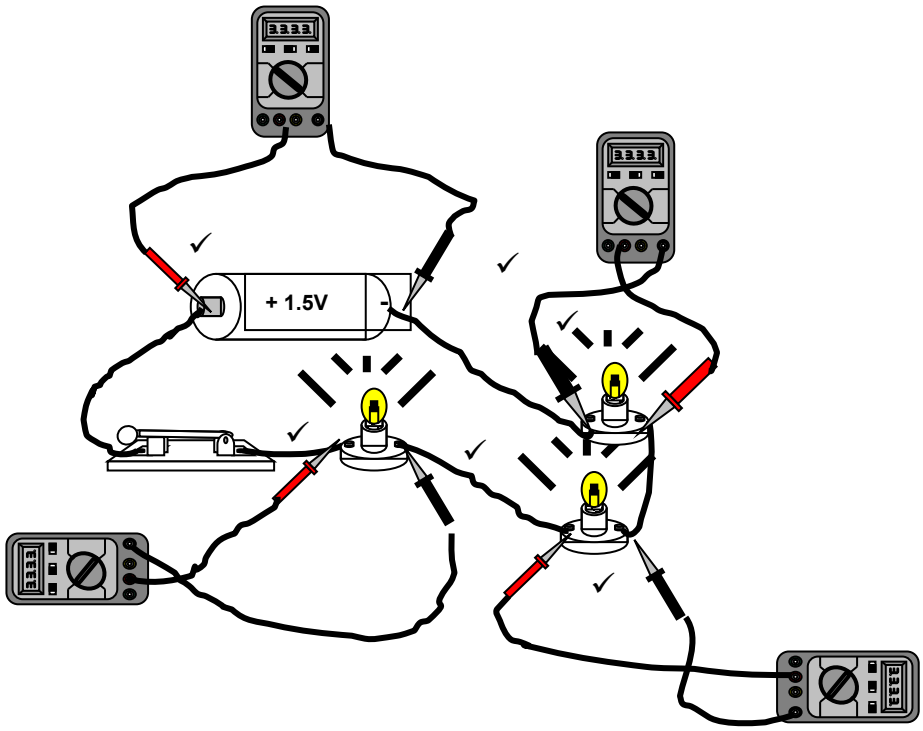

(Marker to use discretion) (6 × 1) (6)
[20]

TOTAL: 100

Copyright reserved