higher education & training

Department:
Higher Education and Training
REPUBLIC OF SOUTH AFRICA

NATIONAL CERTIFICATE (VOCATIONAL)

MECHATRONIC SYSTEMS
NQF LEVEL 3

(6040213)

7 December 2020 (X-paper)
09:00–12:00

This question paper consists of 5 pages.

365Q1N2007

Copyright reserved

TIME: 3 HOURS
MARKS: 100

INSTRUCTIONS AND INFORMATION

1. Answer all the questions.
2. Read all the questions carefully.
3. Number the answers according to the numbering system used in this question paper.
4. Start each question on a new page.
5. Write neatly and legibly.

Copyright reserved

QUESTION 1

1.1 Explain, with the aid of a drawing, the basic operation of a capacitor that is used to measure pressure in a hydraulic line. (5)

1.2 Draw the symbol of a thyristor. (4)

1.3 Explain the function of a monostable multivibrator. (3)

1.4 Give ONE application of a monostable multivibrator. (1)

1.5 Explain the term *telemetering*. (3)

1.6 Explain how the speed of an AC motor can be reduced by switching a sine wave on and off. (2)

[18]

QUESTION 2

2.1

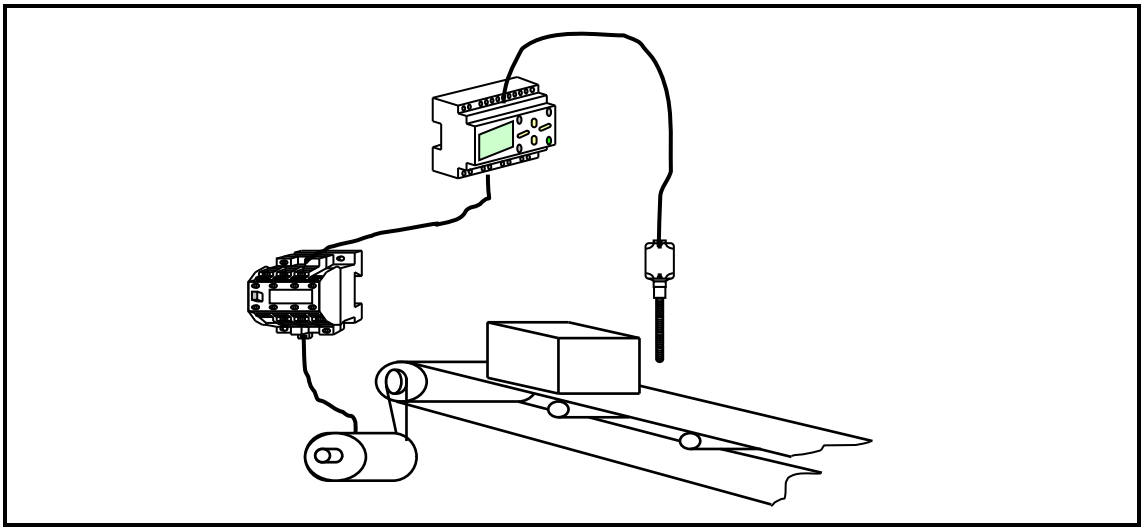

FIGURE 1

Name the motion-control system shown in FIGURE 1. (1)

2.2 Differentiate between *absolute encoders* and *incremental encoders*. (3 + 3) (6)

2.3 Make a simplified labelled drawing of a three-phase pulse-width modulator (PWM). (10)

2.4 Give FOUR advantages of a servomotor. (4)

[21]

Copyright reserved

QUESTION 3

3.1

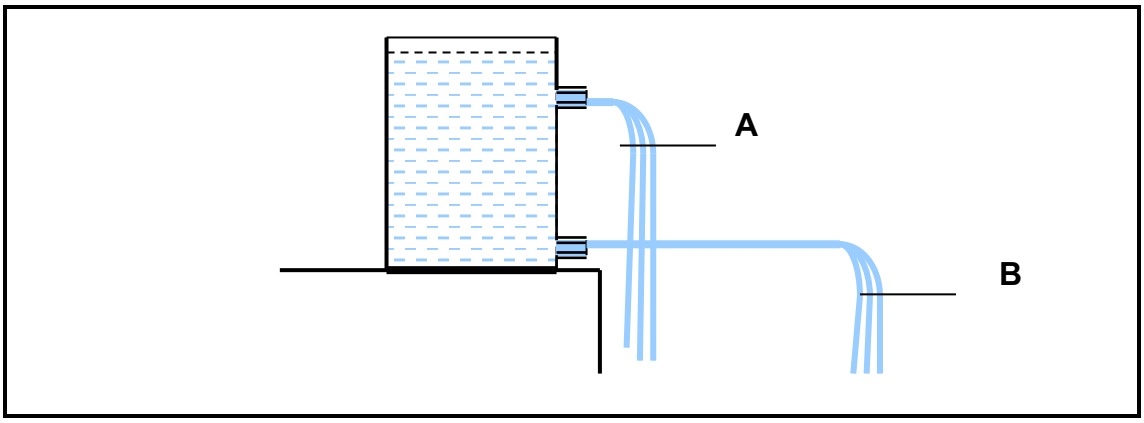

FIGURE 2

Explain why there is a pressure difference in the outlets of the water tank as shown in FIGURE 2. (4)

3.2 In a hydraulic application it is required to activate a clamping cylinder before the hydraulic motor will rotate on a machining process. The clamping device will only retract when the hydraulic motor has been stopped.

Draw a labelled hydraulic working circuit performing the given design function. (10)

3.3 List SIX characteristics of a good hydraulic fluid. (6)
[20]

QUESTION 4

4.1 Explain the term *control*. (3)

4.2 Give TWO examples of electrohydraulic applications in the industry. (2)

4.3 When a start push button (S1) is pressed, relay K1 is energised and the make switch of relay K1 keeps the relay energised. The make switch of K1 must also energise 1M1 and a timer T1. The make switch of T1 must energise relay K2 and the make switch of K2 must energise 1M2. The cylinder must retract slowly.

4.3.1 Design the electrohydraulic working circuit for the given operation. (5)

4.3.2 Design the electrical control circuit for the given operation. (10)
[20]

Copyright reserved

QUESTION 5

5.1 5.1.1 Give TWO things one would check first to determine the cause of hydraulic system failure. (2)

5.1.2 List THREE common causes of hydraulic system downtime. (3)

5.2 Differentiate between a *short circuit* and an *open circuit*. (5)

5.3 Briefly explain how to rectify the error if the supply to a power supply is present but does not produce an output voltage. (5)

5.4 FIGURE 3 represents an electrohydraulic system.

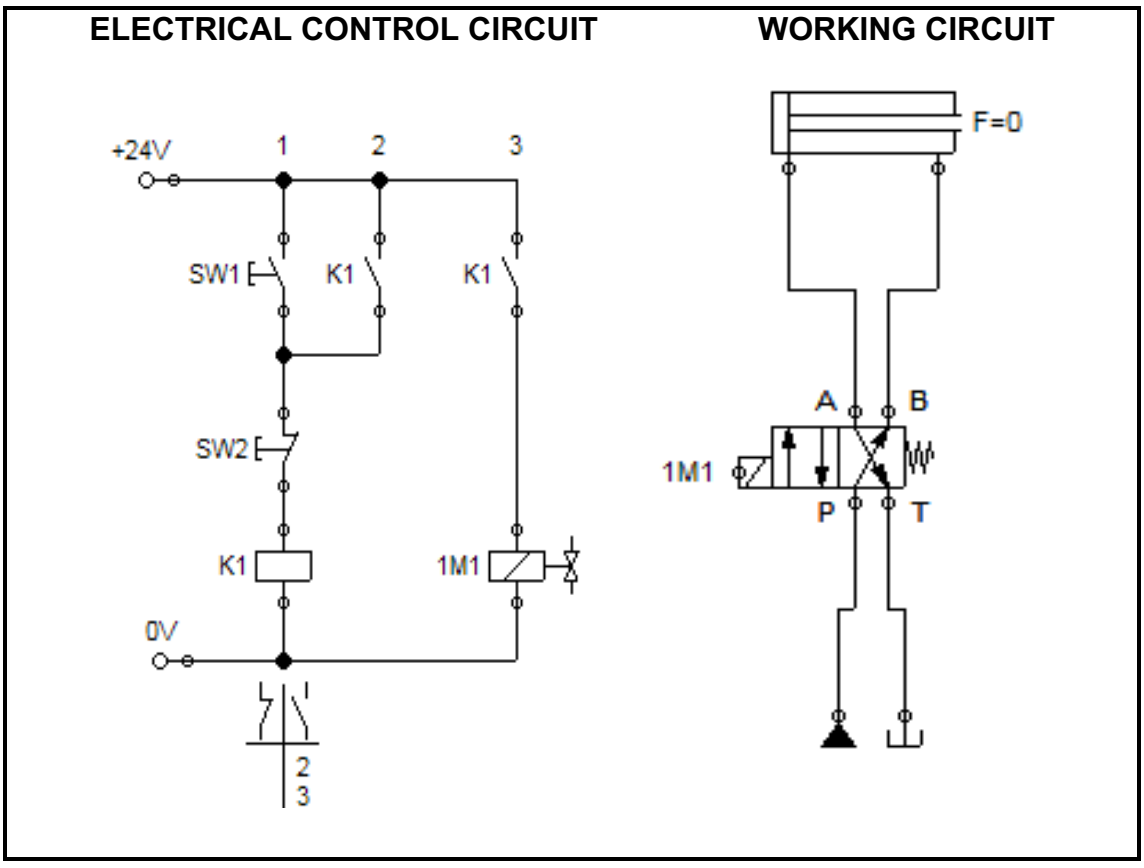

FIGURE 3

5.4.1 List THREE electrical faults that can occur when the directional control valve (DCV) fails to operate. (3)

5.4.2 List THREE mechanical (hydraulic) faults that can occur when the directional control valve (DCV) fails to operate. (3)

[21]

TOTAL: 100

Copyright reserved