higher education & training

Department:
Higher Education and Training
REPUBLIC OF SOUTH AFRICA

NATIONAL CERTIFICATE (VOCATIONAL)

MECHANICAL DRAUGHTING AND TECHNOLOGY

(Second Paper**)**

NQF LEVEL 4

(12050694)

18 November 2019 (X-Paper)
09:00–13:00

REQUIREMENTS: **A3 or A4 drawing sheets**

Computer software may be used.

This question paper consists of 5 pages and 2 diagram sheets.

Copyright reserved

TIME: 4 HOURS
MARKS: 100

INSTRUCTIONS AND INFORMATION

1. Answer ALL the questions.
2. Read ALL the questions carefully.
3. Number the answers according to the numbering system used in this question paper.
4. Use a single or both sides of the drawing sheet.
5. A 15 mm border must be drawn on the DRAWING SHEET.
6. ALL drawing work including candidate information must be done in CAD program.
7. Use your own discretion where applicable.
8. A balanced layout is very important and candidates will be penalised for poor planning.
9. ALL drawing work must conform to the latest SANS 10111 Code of Practice for Engineering Drawing.
10. Work neatly.

Copyright reserved

QUESTION 1: SCREW THREADS AND SPRINGS

Draw, according to the scale 1:1, two full turns of a right-handed helical spring which is made of 20 mm square material. The outside diameter is 150 mm and the lead is 60 mm.

- Show the true helical curves.
- Show all the construction lines..
- No dash lines are required. **[15]**

QUESTION 2: GEARS AND KEYS

Draw, according to the scale 1:1 and in third-angle orthographic projection, the conventional representation of a full sectional front view and an outside right view of a spur-gear system.

A gear with the following details is known:

Pitch circle diameter:	180 mm
Number of teeth:	15
Pressure angle:	20˚
Shaft diameter:	32 mm
Gear width:	22 mm

(11)

Show ALL calculations (4)

[15]

QUESTION 3: CAMS

A cam profile is required which will impart motion to a knife edge follower.

Draw, according to scale 1:1, a full profile of the disc-cam using the following information:

CAM DATA:

• Shaft diameter:	Ø28 mm
• Stroke height:	48 mm
• Minimum diameter:	Ø48 mm
• Performance up(lift):	from 0° to 180°
• Type of motion:	uniform acceleration and retardation
• Performance down (fall):	from180° to 360°
• Rotation:	anti - clockwise

Show a displacement diagram and ALL construction lines. The displacement diagram must be drawn on the left hand side of the cam profile. The knife edge follower need NOT be drawn. **[15]**

Copyright reserved

QUESTION 4: ASSEMBLY DRAWING

DIAGRAM SHEET 1, (attached) shows the components of a stay rod pivot.

The complete parts list is as follows:

Item 1	Base	1 off	Cast steel
Item 2	Hinge block	1 off	Mild steel
Item 3	Rod	1 off	Mild steel
Item 4	Hexagon nut	1 off	Mild steel
Item 5	Hexagon head bolt	1 off	Mild steel
Item 6	Hexagon nut	1 off	Mild steel

(28)

4.2 Insert the title and the scale centrally beneath the assembly. (2)

[30]

QUESTION 5: DETAIL DRAWING

DRAWING SHEET 2 (attached), shows a steam engine piston assembly which consists of the following: Piston (item 1); Piston rod (item 2); Piston ring (item 3); and hexagon nut (item 4).

Draw, according to the scale 1:2 and in third–angle orthographic projection, detail drawings of the following components.

5.1 The piston (item1) showing the following views:

5.1.1 A half – sectional front view with the top half in section. (10)

5.1.2 A right outside view (5)

5.2 Piston rod (item 2) showing a front view only. (5)

5.3 Piston ring (item 3) showing the following views:

5.3.1 A half – sectional front view with the top half in section (3)

5.3.2 A right view (2)

[25]

TOTAL: 100

Copyright reserved

DIAGRAM SHEET 1

DIAGRAM

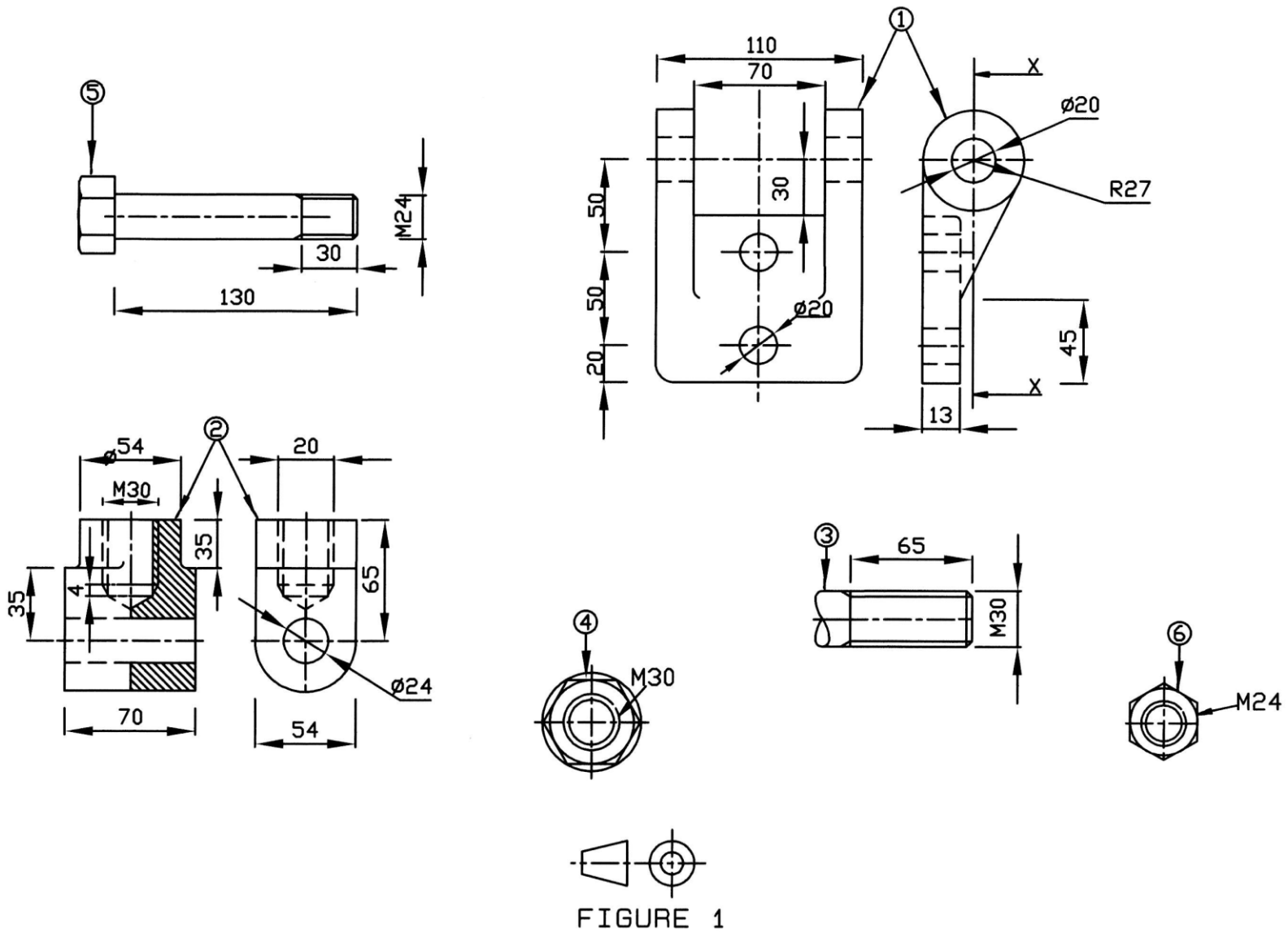

FIGURE 1

Copyright reserved

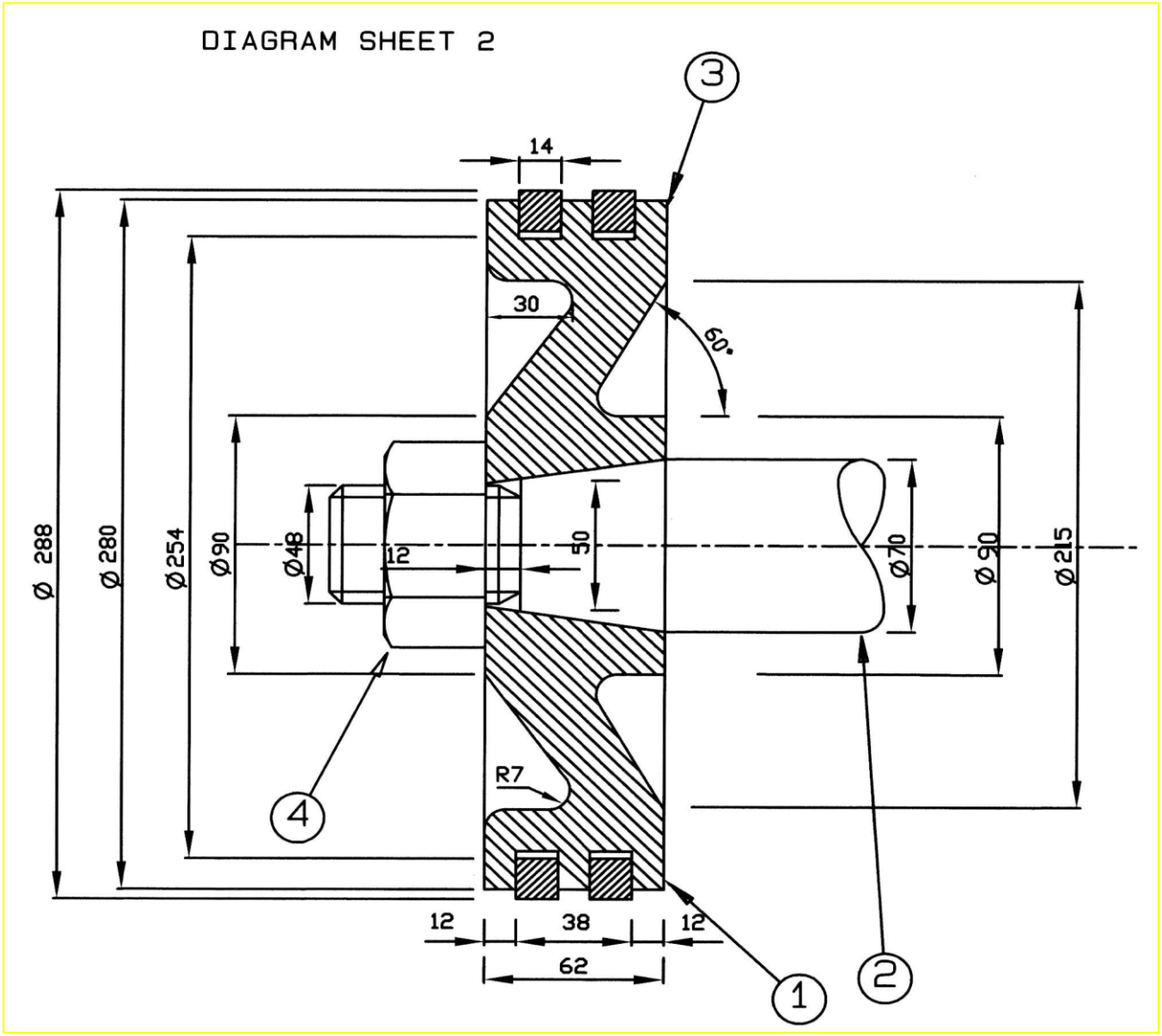

Copyright reserved