higher education & training

Department:
Higher Education and Training
REPUBLIC OF SOUTH AFRICA

NATIONAL CERTIFICATE (VOCATIONAL)

MECHANICAL DRAUGHTING AND TECHNOLOGY

(Second Paper)

NQF LEVEL 4

(12050694)

8 November 2018 (X-Paper)
09:00–13:00

REQUIREMENTS: A4 drawing sheets

Calculators and CAD software may be used.

This question paper consists of 5 pages and 2 diagram sheets.

Copyright reserved

TIME: 4 HOURS
MARKS: 100

INSTRUCTIONS AND INFORMATION

1. Answer ALL the questions.
2. Read ALL the questions carefully.
3. Number the answers according to the numbering system used in this question paper.
4. Use a CAD program to draw ALL questions.
5. Draw a 15 mm border around each DRAWING SHEET.
6. Use your own discretion for dimensions NOT given.
7. Unspecified radii must be R3.
8. A balanced layout is very important and candidates will be penalised for poor planning.
9. Write neatly and legibly.

Copyright reserved

QUESTION 1: SCREW THREADS AND SPRINGS

1.1 Draw, to scale 1:1, the conventional representation of an outside front view of an external right-hand square thread using the following specifications:

Nominal diameter:	60 mm
Screw thread length:	100 mm
Pitch:	18 mm

(10)

1.2 Draw, to scale 1:1, TWO full turns (coil) of a helical spring made of the following:

Number of turns:	2
Square material size:	16 mm
Lead:	48 mm
Outside diameter:	120 mm
Spring length:	112 mm
Lead division:	4 mm

(10)
[20]

QUESTION 2: GEARS AND KEYS

Draw, to scale 1:1 and in first-angle orthographic projection, the conventional representation of a full-sectional front view and outside left view of a spur-gear system. A pinion meshes with a gear and the following details are known:

	PINION	GEAR
Pitch-circle diameter	99,31 mm	129,87 mm
Dedendum	module	module
Addendum	1,25 × module	1,25 × module
Number of teeth	13	17
Hole diameter	32 mm	40 mm
Gear widths	38 mm	38 mm

Show ALL calculations and construction lines. Centre distance of shafts = 114,59 mm. **[20]**

Copyright reserved

QUESTION 3: CAMS

A cam profile, which will impart motion to a knife-edge follower, is required.

Cam data:

- Minimum diameter: 32 mm
- Stroke height (lift/fall): 40 mm

- Performance: Dwells for the first 30° of cam rotation
  Rises 40 mm in 120° of cam rotation according to constant velocity
  Dwells for the next 30° of cam rotation
  Falls 40 mm in the next 180° of cam rotation
  Rotation according to uniform acceleration and retardation
  Rotation of cam is clockwise

Show the displacement diagram and ALL construction lines. The displacement diagram must be drawn on the left-hand side of the cam profile. The knife-edge follower need NOT be drawn. Do NOT insert any dimensions. Show ALL construction lines. **[15]**

QUESTION 4: ASSEMBLY DRAWING

FIGURE 1, DIAGRAM SHEET 1 (attached), shows the components of a cotter joint.

Item 1	Strap connection	1 off	Cast steel
Item 2	Rod end	1 off	Cast steel
Item 3	Bearing half	2 off	Bronze
Item 4	Cotter	1 off	Mild steel
Item 5	Gib	1 off	Mild steel

Draw, to scale 1:2, an assembly drawing in third-angle orthographic projection of the full-sectional front view of the assembled parts. **[25]**

Copyright reserved

QUESTION 5: DETAIL DRAWING

FIGURE 2, DIAGRAM SHEET 2 (attached), shows a full-sectional front view and a full-sectional top view on cutting plane X-X of a horizontal disc-mounting tool.

Draw, to scale 1:1, detailed drawings of the following items showing the views in first-angle orthographic projection

5.1 An outside front view of the mounting bracket (Item 1) (5)

5.2 A half-sectional front view of the mounting disc (Item 2) with the right half in section. (8)

5.3 An outside top view of the mounting disc (Item 2) (7)

[20]

TOTAL: 100

Copyright reserved

DIAGRAM SHEET 1

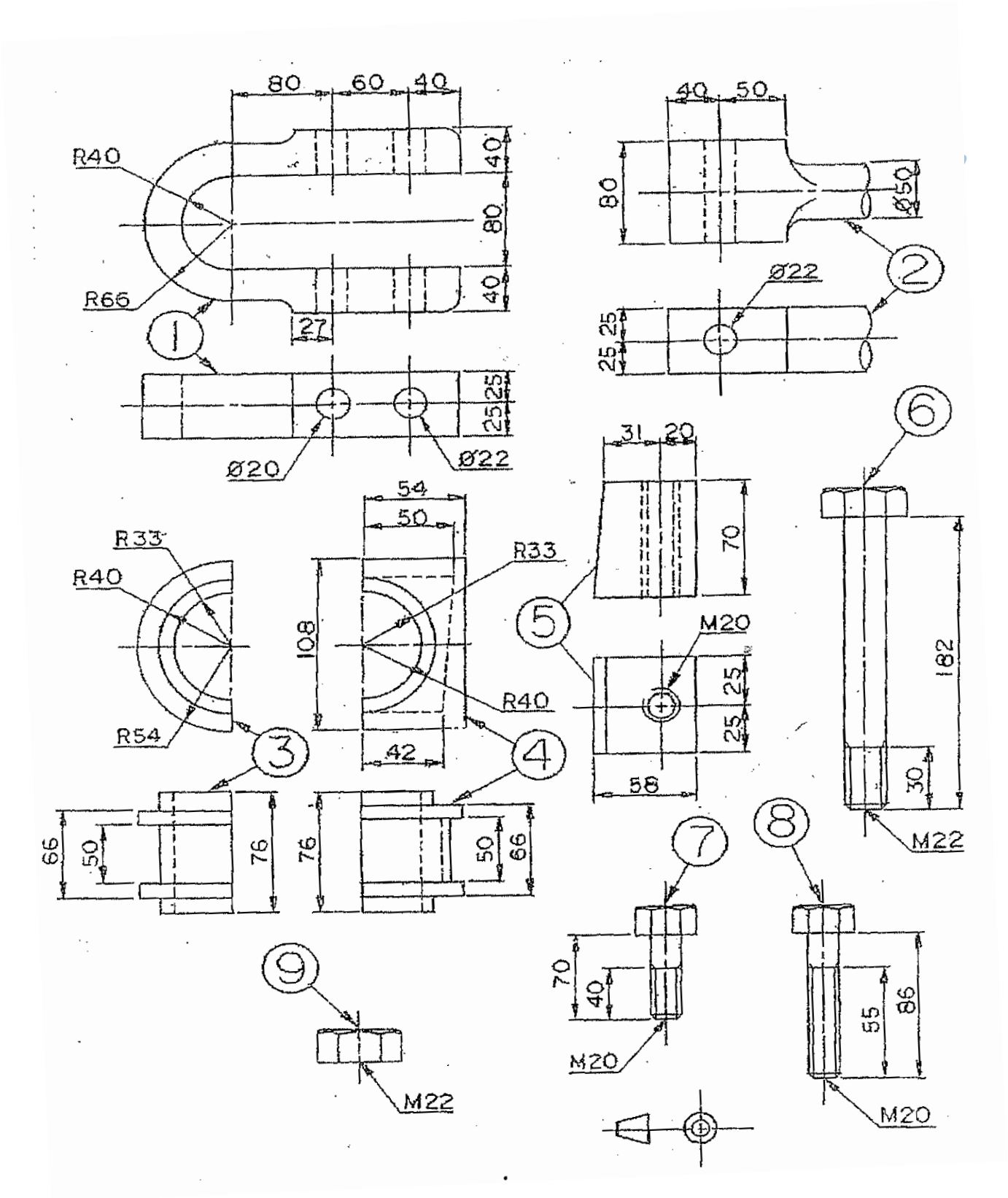

FIGURE 1

Copyright reserved

DIAGRAM SHEET 2

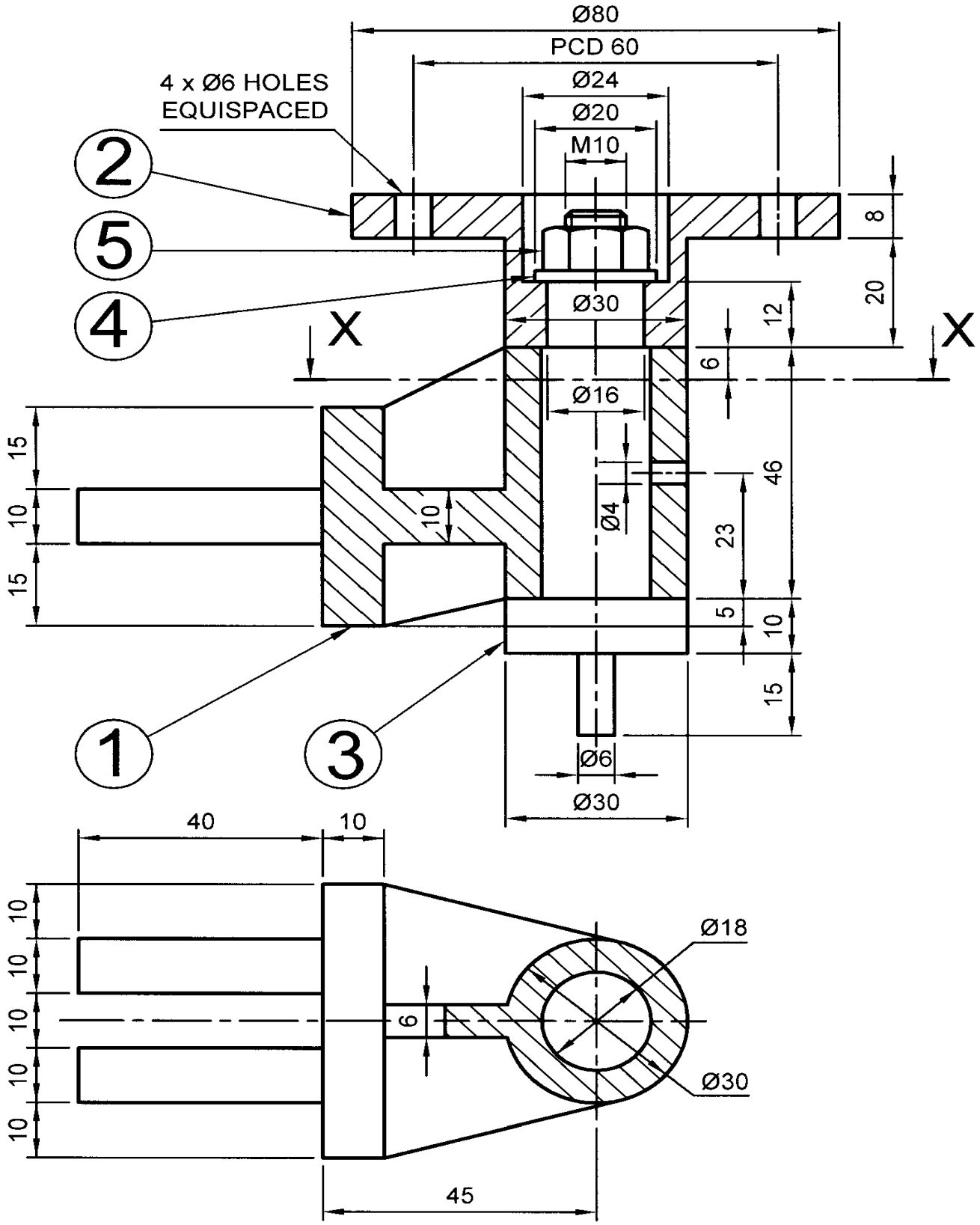

FIGURE 2

Copyright reserved