higher education & training

Department:
Higher Education and Training
REPUBLIC OF SOUTH AFRICA

NATIONAL CERTIFICATE (VOCATIONAL)

MECHANICAL DRAUGHTING AND TECHNOLOGY

(Second Paper)

NQF LEVEL 4

(12050694)

27 February 2018 (X-Paper)
09:00–13:00

CLOSED-BOOK EXAMINATION

REQUIREMENTS: **CAD workstation**
A4 paper
Calculator

This question paper consists of 5 pages and 2 diagram sheets.

Copyright reserved

TIME: 4 HOURS
MARKS: 100

INSTRUCTIONS AND INFORMATION

1. Answer ALL the questions.
2. Read ALL the questions carefully.
3. Number the answers according to the numbering system used in this question paper.
4. The QUESTION NUMBER must appear at the TOP left hand corner of each paper.
5. A balanced layout is very important and candidates will be penalized for poor planning.
6. Candidates will be responsible, under supervision, for plotting of their own drawings on A4 size paper.
7. Candidates' information must be plotted on the bottom right hand corner of each drawing sheet.
8. ALL drawing work, including candidate information, must be done in CAD.
9. Each question must be plotted on a separate A4 sheet with a 10-mm wide border
10. ALL drawing work must conform to the latest SABS 0111 Code of Practice for Engineering Drawing.
11. If any dimensions are omitted assume sizes in good proportion..
12. Print neatly and legibly to the correct scale.

Copyright reserved

QUESTION 1: SPUR GEAR

Draw, according to first-angle orthographic projection, the conventional representation of a half-sectional front view with the top half in section and a left view of a single spur gear. Use scale 1 : 1.

DATA:

- Pitch- circle 90 mm
- Addendum 5 mm
- Dedendum 6 mm
- Hole diameter 20 mm
- Thickness of gear 30 mm
- Keyway width D/4
- Keyway height D/12 **[15]**

Print to SCALE.

QUESTION 2: CAM DISC

A cam profile is required which will impart motion to a knife-edge follower. Draw, to scale 1 : 1, a full profile of the cam disc using the following information:

CAM DATA

- Minimum diameter 30 mm
- Stroke height (lift/fall) 42 mm
- Performance
  Rises 42 mm in first 180° of cam rotation according to constant velocity motion.

  Falls 42 mm in the next 180° of cam rotation according to uniform acceleration and retardation
  Rotation is anti-clockwise

Draw the displacement diagram and a cam profile showing ALL construction lines. The displacement diagram must be drawn on the left-hand side of the cam profile. The knife-edge follower need NOT be drawn. **[15]**

Print to SCALE.

Copyright reserved

QUESTION 3: SQUARE THREAD CONSTRUCTION

A screw with a single- start left handed square thread has a nominal diameter of 140 mm and a root diameter of 92 mm.

Draw to scale 1 : 1, one and a half turns of this thread, showing the true helical curves.

Do NOT show any hidden details or calculations. **[15]**

Print to SCALE.

QUESTION 4: DETAIL DRAWING

FIGURE 1 (attached) shows a full sectional view of frictional coupling which consists of the following:

Item 1 ... Flange

Item 2 ... Flange

Item 3 ... Sleeve

Item 4 ... Shaft

Item 5 ... Shaft

Item 6 ... Bolt

Item 7 ... M10 hexagon nut

Draw, to scale 1 : 1 and in first-angle orthographic projection, detailed drawings of the following components:

4.1 The flange (ITEM 1) showing a half-sectional front view with the top half in section. (13)

4.2 The flange (ITEM 2) showing a half-sectional front view with the top half in section. Insert TWO dimensions (12)

NO hidden detail is required. **[25]**

Print to SCALE.

Copyright reserved

QUESTION 5: ASSEMBLY DRAWING

FIGURE 2 (attached) shows the components of a cable trolley drawn in first-angle orthographic projection. The complete parts list is as follows:

Item 1	Side plate	2 off	mild steel
Item 2	Clamping block	2 off	cast steel
Item 3	Shaft	2 off	cast steel
Item 4	Suspending bracket	1 off	brass
Item 5	Shaft	3 off	tensile steel
Item 6	Hexagon nut	6 off	mild steel
Item 7	Hexagon lock nut	6 off	mild steel

Make an assembly to scale 1 : 1, showing a full sectional front view on cutting plane X-X of the cable trolley.

Item numbers must be indicated on the assembly drawing. **[30]**

Print to SCALE.

TOTAL: 100

Copyright reserved

FIGURE 1

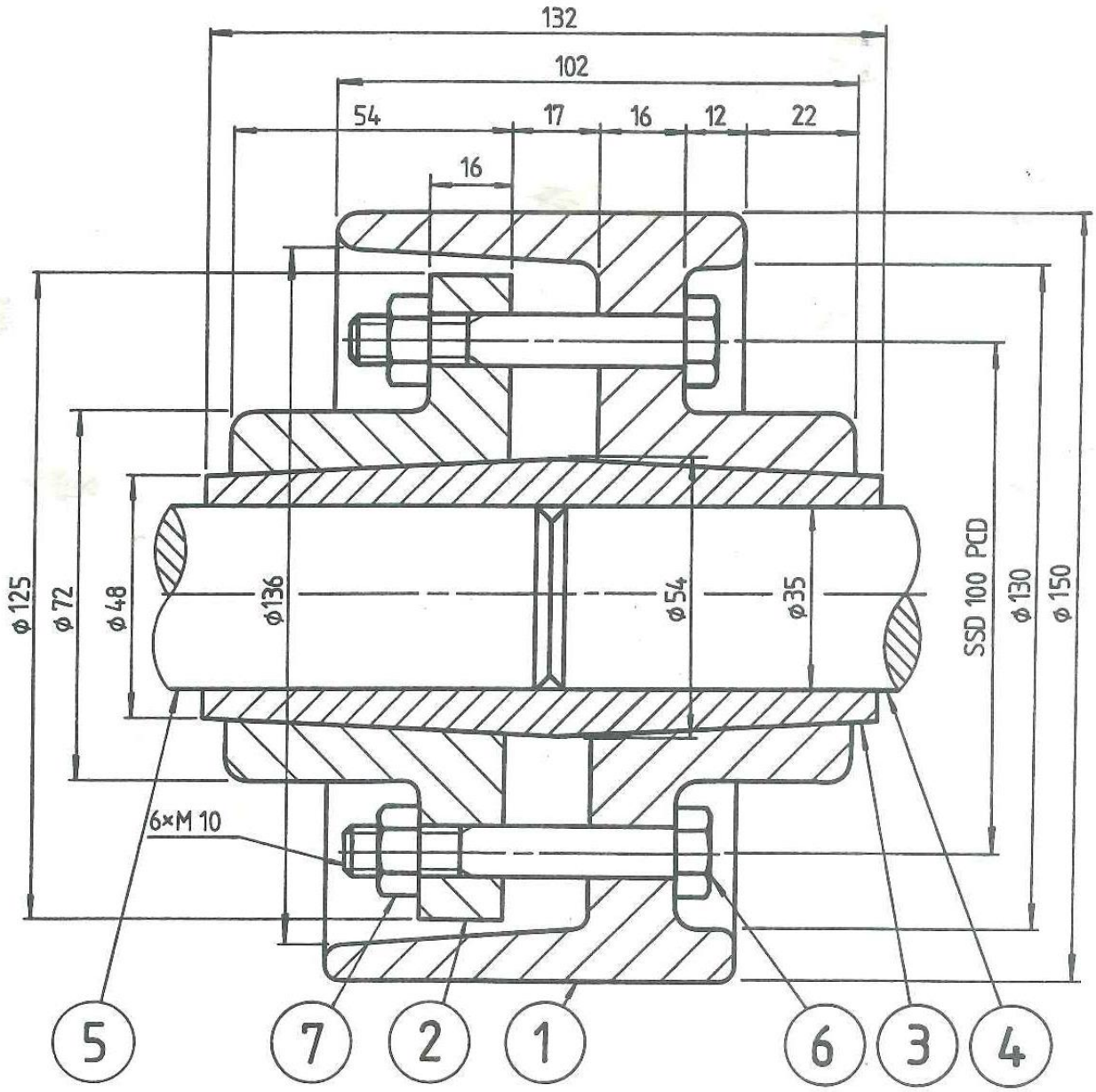

Copyright reserved

FIGURE 2

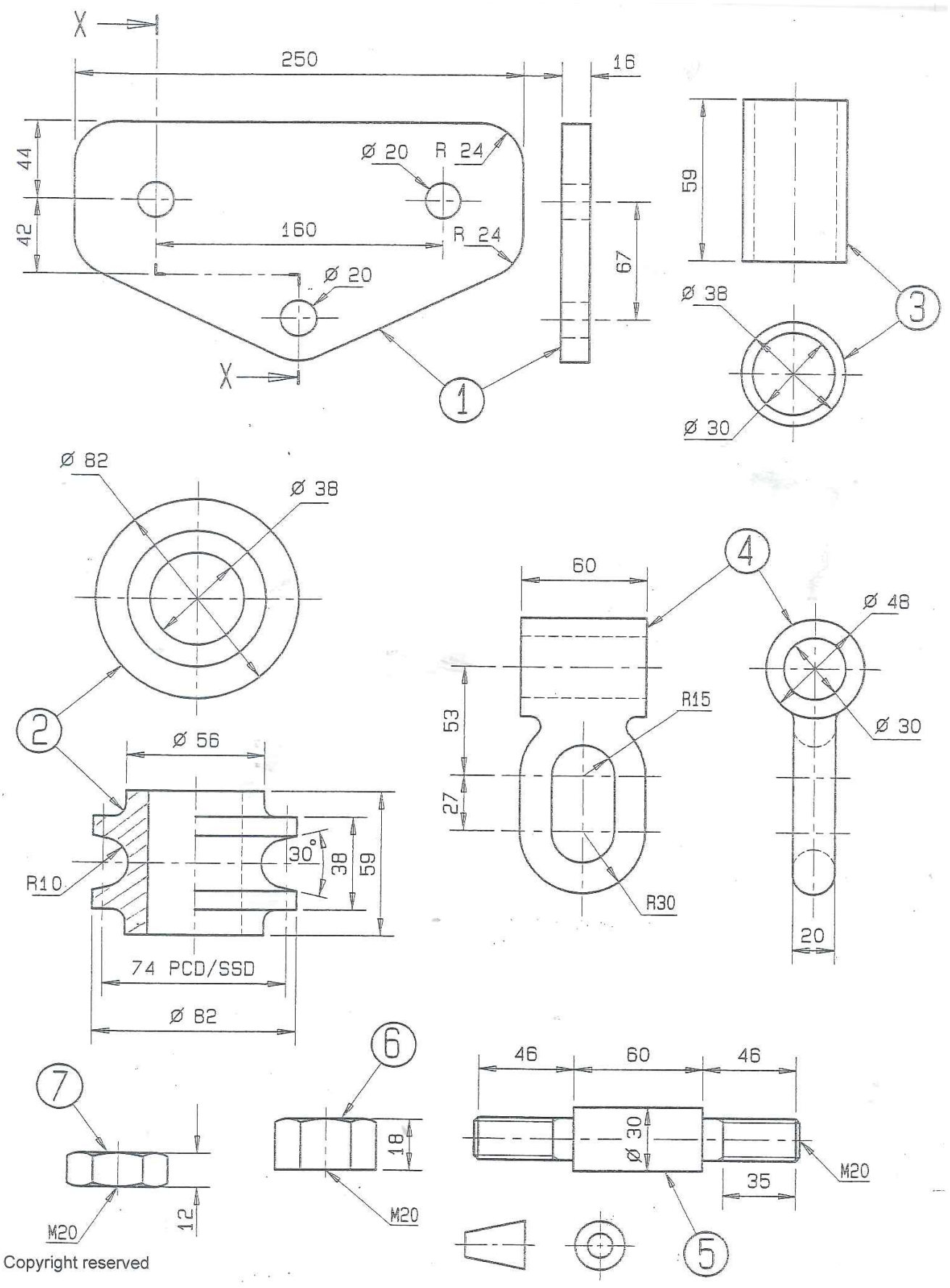

Copyright reserved

Copyright reserved