higher education & training

Department:
Higher Education and Training
REPUBLIC OF SOUTH AFRICA

MARKING GUIDELINE

NATIONAL CERTIFICATE (VOCATIONAL)

MECHANICAL DRAUGHTING AND TECHNOLOGY

(Second paper)

NQF LEVEL 4

27 February 2020

This marking guideline consists of 9 pages.

Copyright reserved

INSTRUCTIONS AND INFORMATION

1. Copying and scanning of drawings will affect the accuracy of the drawings on the marking guideline.

2. All markers must prepare their own marking guideline to use when marking candidates' drawing sheets.

3. This marking guideline is not absolute. Consider alternative correct answers.

Copyright reserved

QUESTION 1: SCREW THREADS AND SPRINGS

1.1

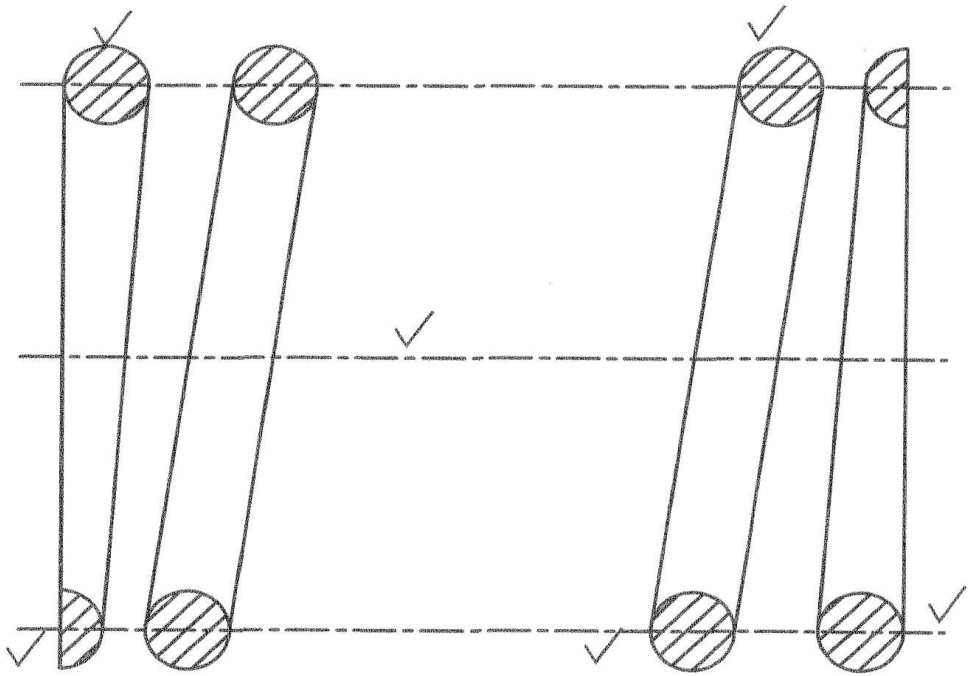

Correctness	6
Accuracy	2
Linework	1
Layout and neatness	1
TOTAL:	**10**

(10)

Copyright reserved

1.2

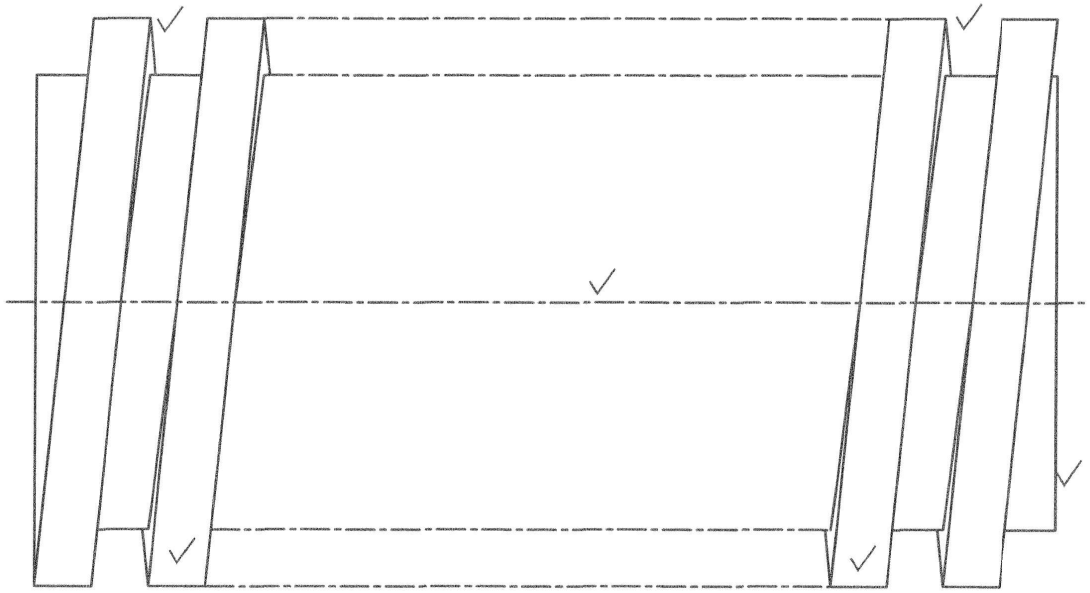

Correctness	6
Accuracy	2
Linework	1
Layout and neatness	1
TOTAL:	**10**

(10)
[20]

Copyright reserved

QUESTION 2: GEARS AND KEYS

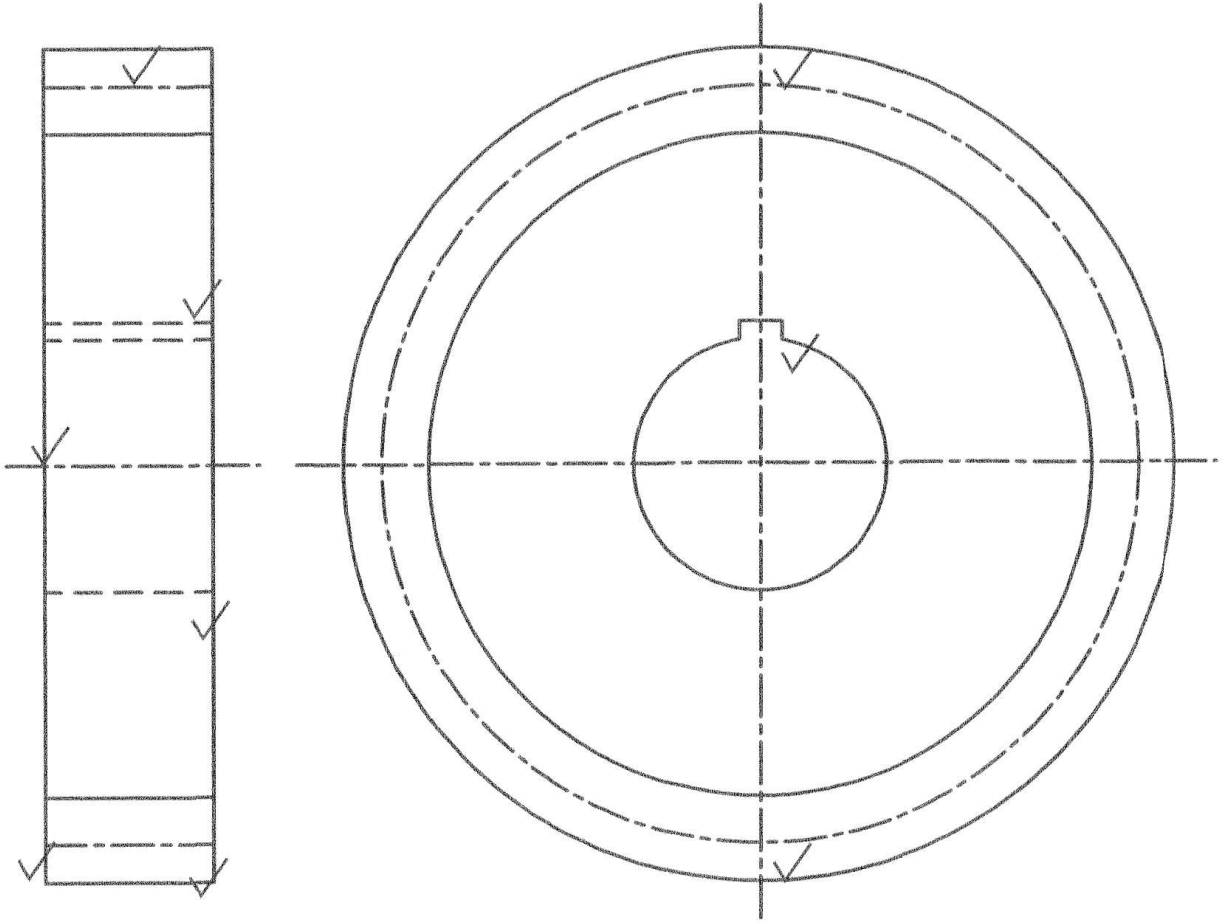

FRONT VIEW	
Correctness	6
Accuracy	2
Linework	2
TOTAL:	**10**

LEFT VIEW	
Correctness	3
Accuracy	1
Linework	1
TOTAL:	**5**

[15]

Copyright reserved

QUESTION 3: CAMS

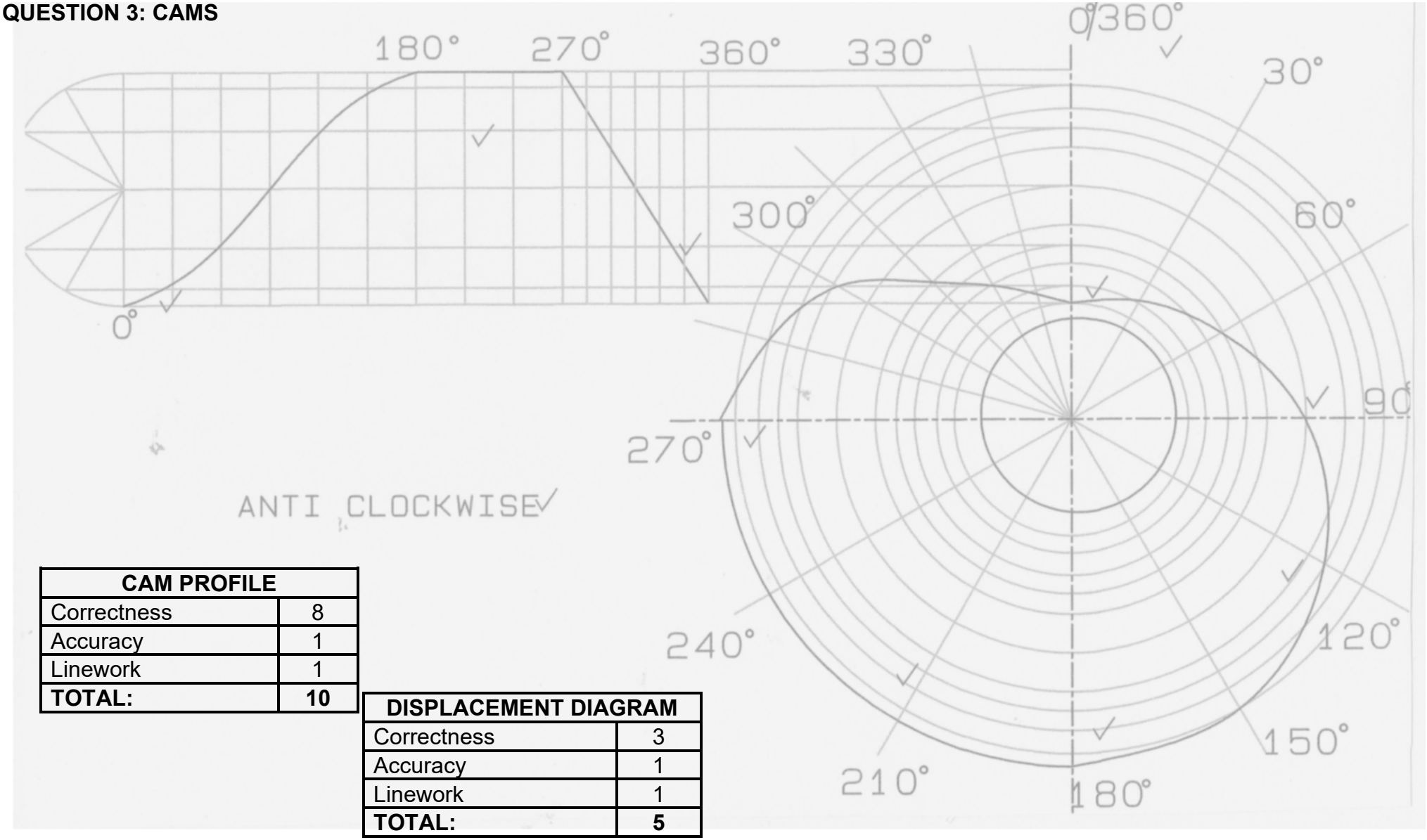

CAM PROFILE	
Correctness	8
Accuracy	1
Linework	1
TOTAL:	**10**

DISPLACEMENT DIAGRAM	
Correctness	3
Accuracy	1
Linework	1
TOTAL:	**5**

[15]

Copyright reserved

QUESTION 4: ASSEMBLY DRAWING

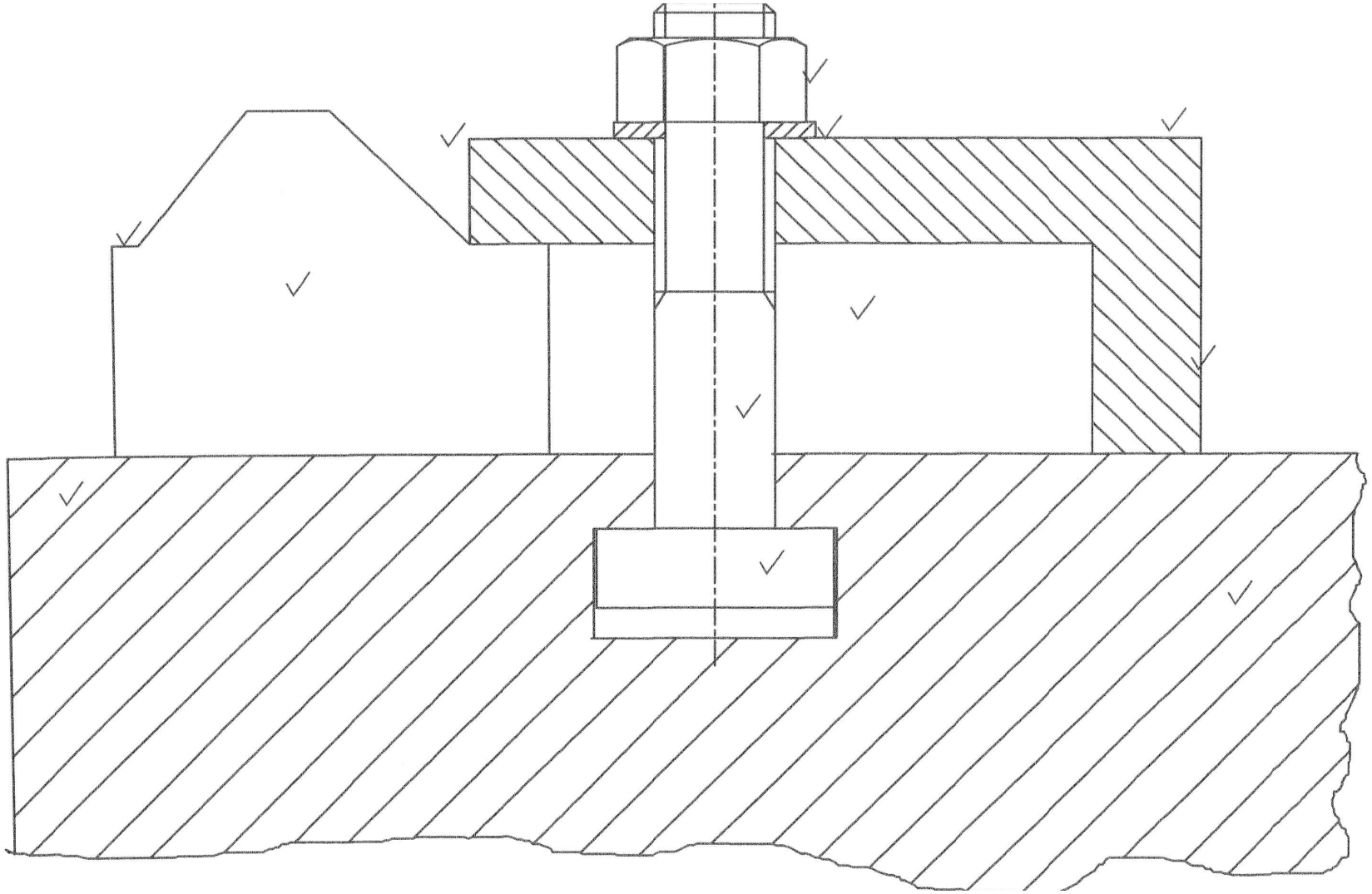

FIXTURE
SCALE 1:1

Correctness	12
Accuracy	5
Hatching	6
Linework	3
Bal/layout	2
Title	1
Scale	1
TOTAL:	**30**

[30]

Copyright reserved

QUESTION 5: DETAIL DRAWING

5.1

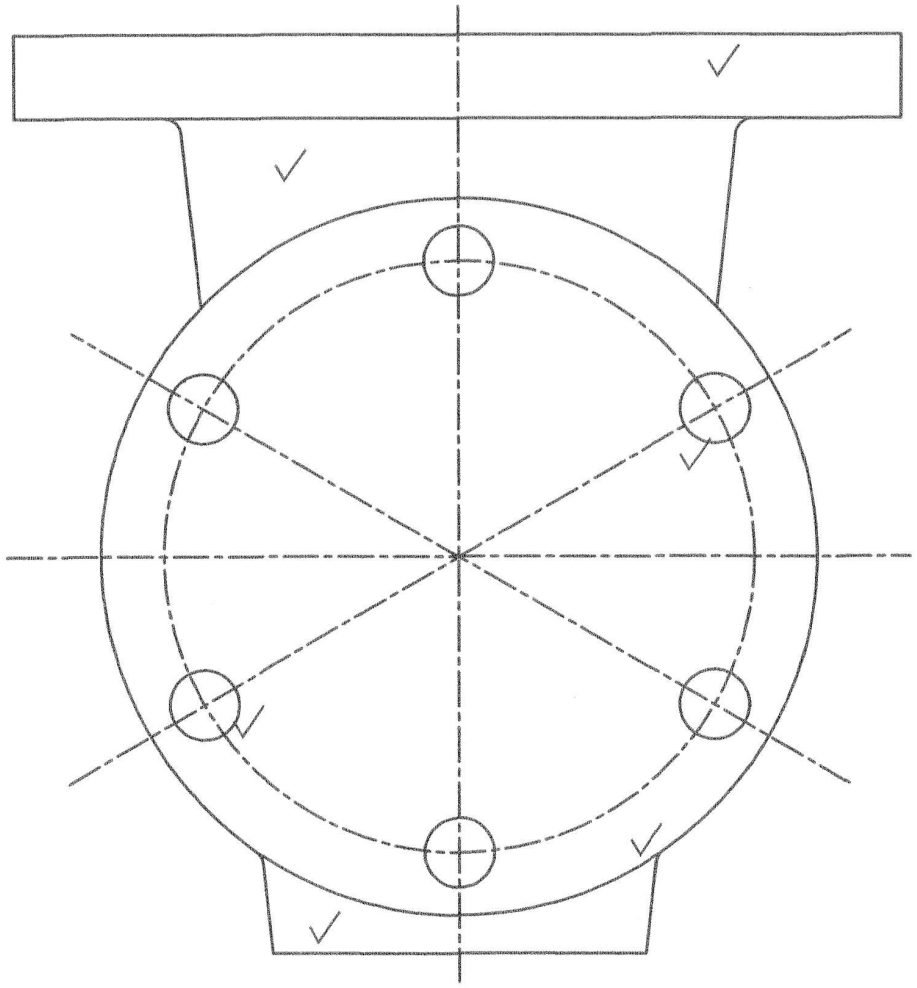

Correctness	6
Accuracy	2
Hatching	1
Linework	1
TOTAL:	**10**

(10)

5.2

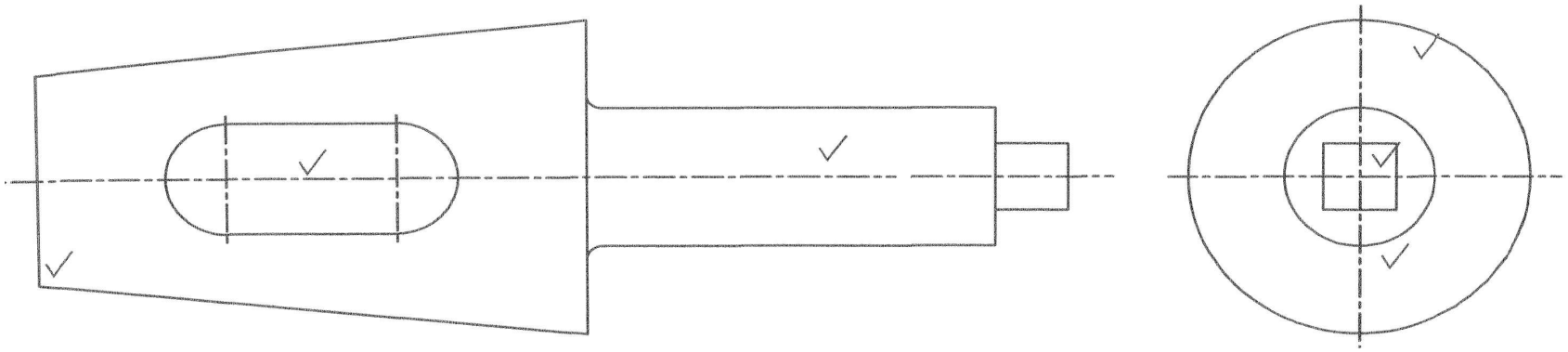

(5 + 5) (10)
[20]

TOTAL: 100

FRONT VIEW

Correctness	3
Accuracy	1
Linework	1
TOTAL:	**5**

TOP VIEW

Correctness	3
Accuracy	1
Linework	1
TOTAL:	**5**

Copyright reserved