higher education & training

Department:
Higher Education and Training
REPUBLIC OF SOUTH AFRICA

NATIONAL CERTIFICATE (VOCATIONAL)

MECHANICAL DRAUGHTING AND TECHNOLOGY

(Second paper)

NQF LEVEL 4

(12050694)

4 December 2020 (X-paper)
09:00–13:00

REQUIREMENTS: A4, A3 or A2 drawing sheets.

Computer software may be used

This question paper consists of 5 pages and 2 diagram sheets.

307Q2N2004

Copyright reserved

TIME: 4 HOURS
MARKS: 100

INSTRUCTIONS AND INFORMATION

1. Answer all the questions.
2. Read all the questions carefully.
3. Number the answers according to the numbering system used in this question paper.
4. Use A2, A3 or A4 drawing sheet.
5. A 15 mm border must be drawn on the drawing sheet.
6. All drawing work including candidate information must be done in a CAD program.
7. Use your own discretion where applicable.
8. A balanced layout is very important, and candidates will be penalised for poor planning.
9. All drawing work must conform to the latest SANS 10111 Code of Practice for Engineering Drawing.

Copyright reserved

QUESTION 1: SCREW THREADS AND SPRINGS

1.1 A cylindrical helical compression spring is manufactured according to the following specifications.

Outside diameter	Ø 80 mm
Lead	20 mm
Wire size	10 mm (square)
Free length	100 mm
Coiled	Left-handed

Draw, to scale 1:1, a conventional presentation of an outside front view of a left-handed helical compression spring.

No dash lines and construction lines are required. (10)

1.2 Draw, to scale 1:1, a conventional presentation of a left-handed internal square thread lead screw which has the following data:

Work piece height = 120
Work piece width = 140 mm
Nominal diameter = Ø 80 mm
Pitch = 20 mm (10)
[20]

QUESTION 2: GEARS AND KEYS

An involute spur gear is meshing with an involute rack. The following details of the gear system have reference:

SPUR GEAR	RACK
Addendum = 1,25 × module	Dedendum = 1,25 × module
Number of teeth = 20	Number of teeth = 24
Module = 11	Module = 11
Pressure angle = 20°	Height (thickness) of bar = 50 mm
Shaft diameter = Ø36	

Draw, half size, the gear system in meshed position and in first angle orthographic projection the conventional presentation of an outside front view only **[15]**

Copyright reserved

QUESTION 3: CAMS

A cam profile is required which will impart motion to a knife - edge follower. Draw, to scale 1:1, a full profile of the disc-cam using the following information:

CAM DATA:

- Shaft diameter = Ø28 mm
- Stroke height = 48 mm
- Minimum diameter = Ø48 mm
- Performance up(lift) = from 0° to 180°
- Type of motion = constant velocity
- Dwell = from180° to 270°
- Performance down (fall) = from 270° to 360°
- Rotation = clockwise

Show a displacement diagram with all construction lines. The displacement diagram must be drawn on the left-hand side of the cam profile. The knife - edge follower need not be drawn. **[15]**

QUESTION 4: ASSEMBLY DRAWING

4.1 DIAGRAM SHEET 1 shows the details of a fixture. The complete parts list is as follows:

ITEM	DESCRIPTION	QTY/ASSY	MATERIAL
1	Base	1 off	mild steel
2	Clamp plate	1 off	mild steel
3	Work piece	1 off	mild steel
4	Screw	1 off	mild steel
5	Nut	1 off	mild steel
6	Pin	1 off	mild steel
7	Pin	1 off	mild steel

Draw an assembly drawing, to scale 1:1 and in first-angle orthographic projection, a full-sectional front view of the assembled parts: (28)

4.2 Insert the title and the scale. (2)

[30]

Copyright reserved

QUESTION 5: DETAIL DRAWING

DIAGRAM SHEET 2 shows two views of a stirrup which consists of the following: stirrup (item 1); rod end (item 2); bearing half (item 3); and bearing half (item 4), gib (item 5), cotter (item 6)

Draw, to scale 1:1 and in first-angle orthographic projection, detail drawings of the following components.

5.1 The rod end (item 2) showing the following views:

5.1.1 A front view (5)

5.1.2 A top view (5)

5.2 The bearing half (item 4) showing the following:

5.2.1 A front view (5)

5.2.2 A left view (5)

[20]

TOTAL: 100

Copyright reserved

DIAGRAM SHEET 1

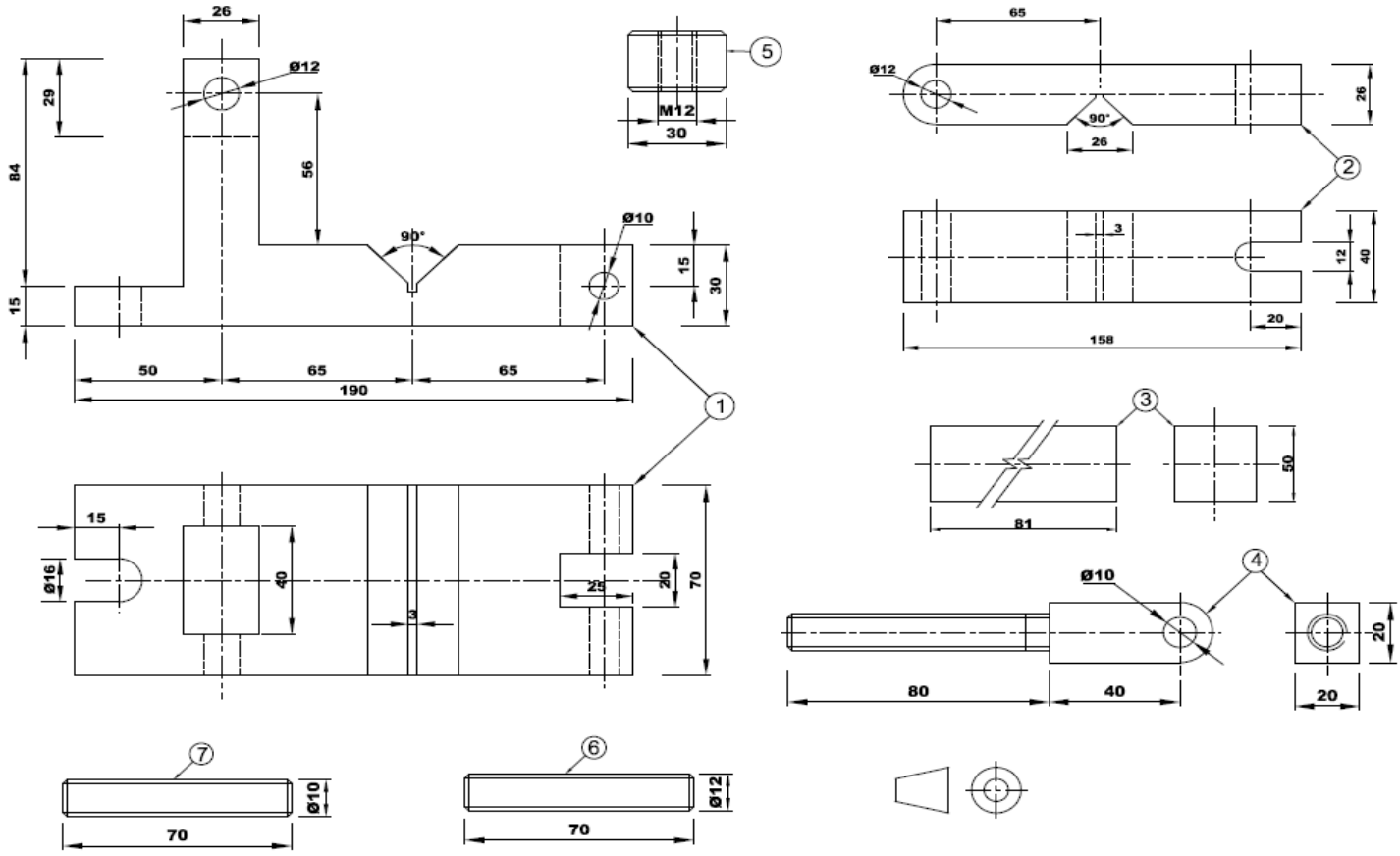

Copyright reserved

DIAGRAM SHEET 2

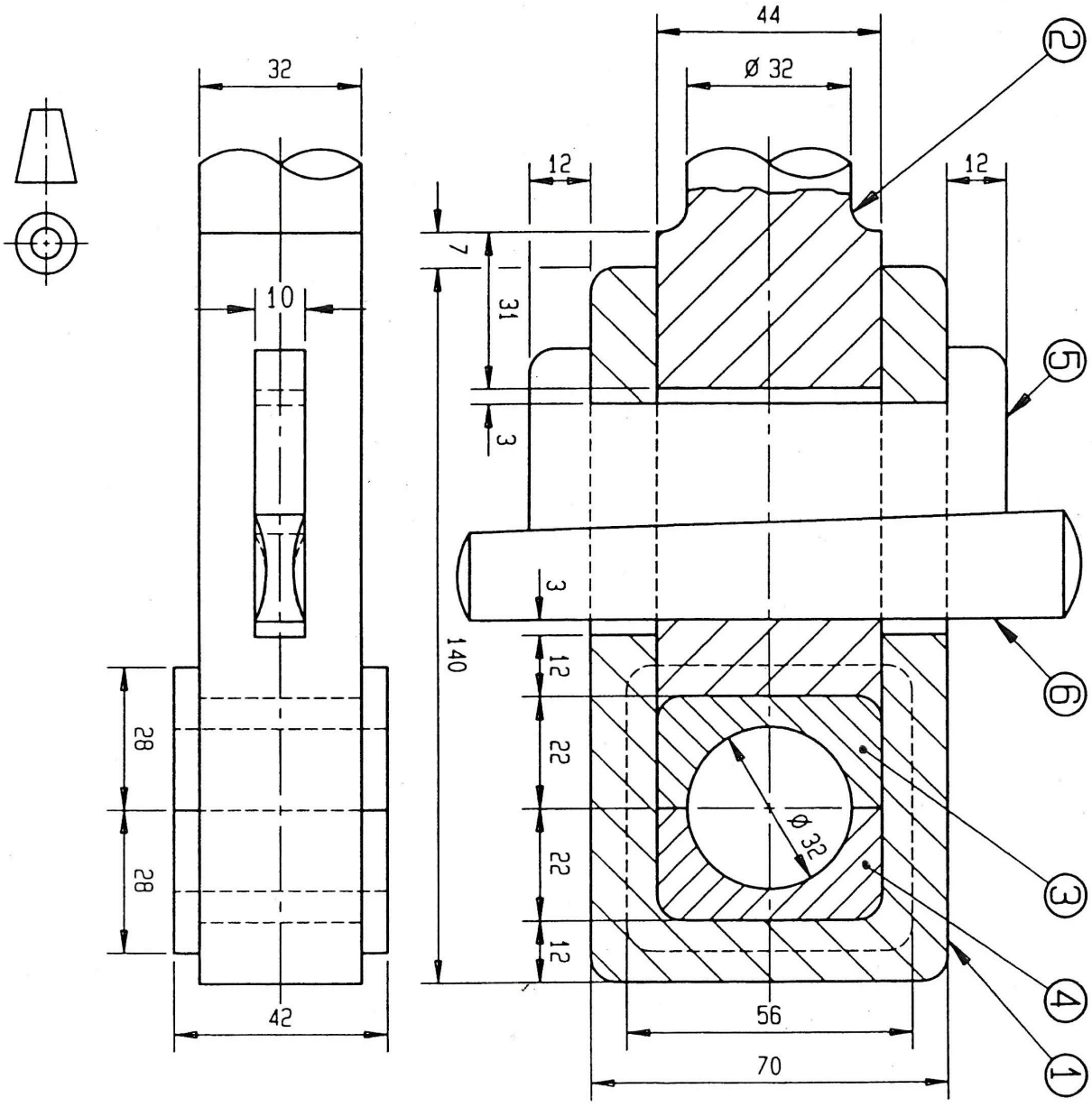

Copyright reserved