higher education & training

Department:
Higher Education and Training
REPUBLIC OF SOUTH AFRICA

NATIONAL CERTIFICATE (VOCATIONAL)

MECHANICAL DRAUGHTING AND TECHNOLOGY

(First Paper)

NQF LEVEL 4

(12050694)

26 February 2018 (Y-Paper)
13:00–16:00

REQUIREMENTS: ONE A4 and A5 drawing paper

This question paper consists of 5 pages.

NCV

TIME: 3 HOURS
MARKS: 100

INSTRUCTIONS AND INFORMATION

1. Answer ALL the questions.
2. Read ALL the questions carefully.
3. Number the answers according to the numbering system used in this question paper.
4. ALL drawing work must be done in pencil.
5. A radius curve stencil may be used to draw smaller arcs.
6. A 15-mm border must be drawn on single side of the drawing paper.
7. Unspecified radii must be R3.
8. A balanced layout is very important and candidates will be penalised for poor planning.
9. Write neatly and legibly.

NCV

QUESTION 1: GENERAL QUESTIONS

1.1 Indicate whether the following statements are TRUE or FALSE. Choose the answer and write 'true' or 'false' next to the question number (1.1.1 – 1.1.5) in the ANSWER BOOK.

1.1.1 Chamfering can be done in any machine.

1.1.2 Countersinking is the conical enlargement of the mouth of a hole.

1.1.3 A draftsman should have good problem-solving abilities.

1.1.4 A cam is a machine element which generally rotates at a uniform speed to produce a controlled up and down movement.

1.1.5 Roughness values are given in the unit micrometres.

(5 × 1) (5)

1.2 How many micrometres are in 1 millimetre? (1)

1.3 Which ONE of the following diagrams shows the correct way to draw a section through a shaft fitted with a key?

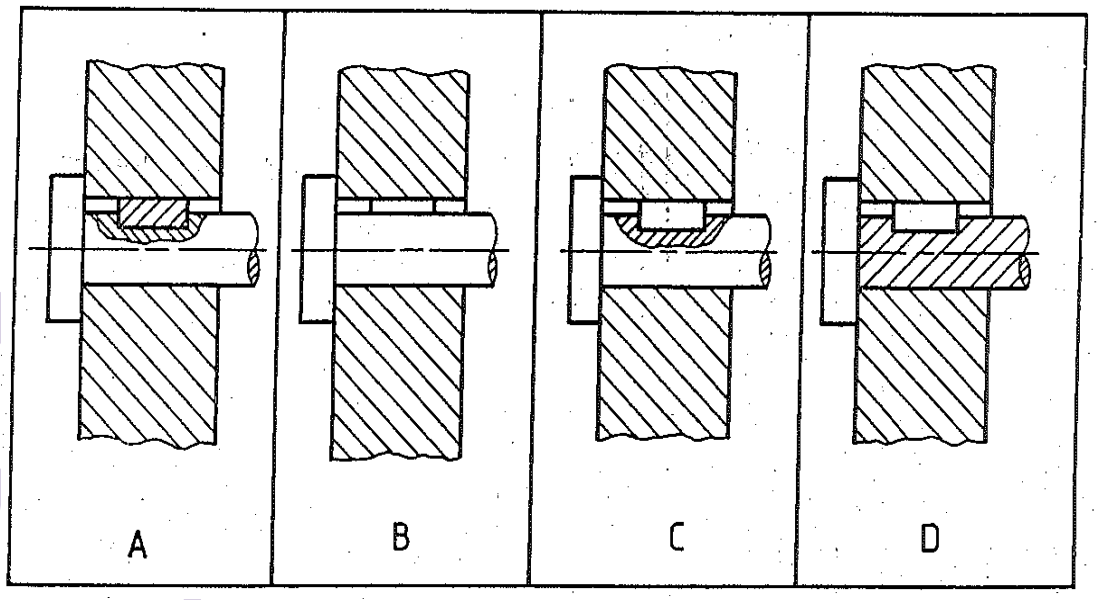

(1)

1.4 List SIX details needed to draw the displacement diagram. (6 × 2) (12)

1.5 Define *cycloid*. (3)

1.6 Define *axial movement*. (2)

[24]

QUESTION 2: FREEHAND DRAWING

The FIGURE below shows the isometric view of a component. Make a freehand drawing of the given view of the component approximately full size.

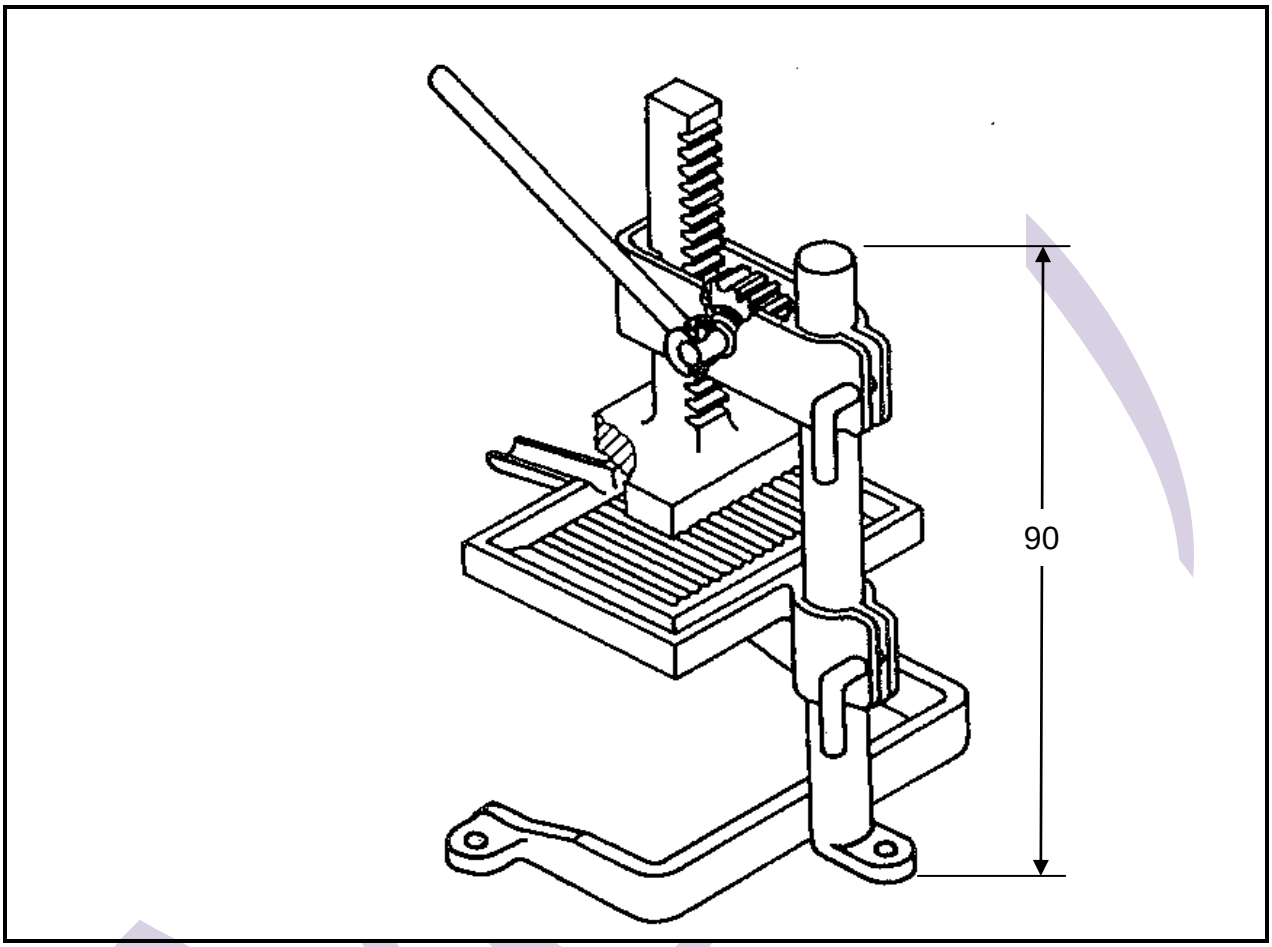

[16]

QUESTION 3: SPUR GEAR

3.1 A pinion meshes with a gear and the following details are known:

	PINION	**GEAR**
Pitch-circle diameter	99,31 mm	129,87 mm
Number of teeth	13	17
Pressure angle	20°	
Shaft diameter	32 mm	40 mm
Centre distance = 114,59 mm		

3.1.1 Calculate the addendum and the dedendum of a gear system. (8)

3.1.2 What is a module of a gear? (3)

3.2 Calculate the width and the height of a gear keyway. (6)

[17]

QUESTION 4: SQUARE THREAD AND SPRINGS

4.1 A screw with a single left-handed square thread has a major diameter of 140mm and a minor diameter of 92 mm.

Calculate the pitch. (4)

4.2 Define the term *pitch*. (3)

4.3 Where are square thread mostly used? (1)
[8]

QUESTION 5: MACHINING, LIMIT AND FITS

5.1 What is meant by clearance between mating parts? (2)

5.2 A 40 mm diameter shaft has an upper deviation of -5 µm and a lower deviation of -15 µm.

Calculate the limit of size for the shaft. (4)

5.3 Calculate the tolerance of the shaft in QUESTION 5.2. (2)

5.4 Briefly describe what is meant by each of the following machining processes:

5.4.1 Turning

5.4.2 Tapping

(2 × 3) (6)

5.5 Draw a machining symbol to indicate that material must be removed by a grinding machine. The roughness value of the surface texture is 6,3 µm. (3)

5.6 Draw a machining symbol to indicate that the surface has to be milled to a surface texture of 1,8 µm. (3)
[20]

QUESTION 6: ASSEMBLY

Draw the part list to be used in assembly drawing to fit on A5 drawing paper.

Use the following components:

Item 1	body	1 off	cast steel
Item 2	pulley	1 off	cast steel
Item 3	pin	2 off	mild steel
Item 4	bush	1 off	brass

[15]

TOTAL: 100

Copyright reserved