higher education & training

Department:
Higher Education and Training
REPUBLIC OF SOUTH AFRICA

NATIONAL CERTIFICATE (VOCATIONAL)

MATERIAL TECHNOLOGY
NQF LEVEL 3

(6021013)

10 December 2020 (Y-paper)
13:00–16:00

This question paper consists of 9 pages.

505Q1N2010

Copyright reserved

TIME: 3 HOURS
MARKS: 100

INSTRUCTIONS AND INFORMATION

1. Answer all the questions.
2. Read all the questions carefully.
3. Number the answers according to the numbering system used in this question paper.
4. Start each question on a new page.
5. Use only a black or blue pen.
6. Write neatly and legibly.

Copyright reserved

QUESTION 1

1.1 Choose a description from COLUMN B that matches a term in COLUMN A. Write only the letter (A–M) next to the question number (1.1.1–1.1.10) in the ANSWER BOOK.

COLUMN A		COLUMN B	
1.1.1	Malleability	A	ability of material to resist crushing forces
1.1.2	Compressive strength	B	density of material
1.1.3	Stress	C	force acting on a body per cross-sectional area
1.1.4	Toughness	D	resistance of material to break under tension
1.1.5	Brittleness	E	ability of material to resist surface wear
1.1.6	Elasticity	F	ability of material to be drawn out to a long length without breaking
1.1.7	Plasticity	G	amount of change in material length under load relative to total material length
1.1.8	Ductility	H	tendency of material to break or crumble when sudden load is applied
1.1.9	Hardness	I	ability of material to return to original shape after removal of load
1.1.10	Tenacity	J	melting point of material
		K	ability of material to resist shock or blows
		L	ability of material to change to new shapes under pressure, retaining its form after removal of load
		M	ability of metal to change its shape without fracturing when hammered

(10 × 1) (10)

1.2 Name THREE types of cast iron. (3)

1.3 How many atoms are found in each of the following structures?

1.3.1 Body-centred cubic structure

1.3.2 Face-centred cubic structure

1.3.3 Close-packed hexagonal structure

(3 × 1) (3)

1.4 Explain the process that takes place in a puddling furnace from after it has been prepared and fired until the metal has melted completely. (5)

1.5 Which effect does carbon, as an alloying element, have on the hardness of steel? (2)

1.6 State TWO factors, other than lubrication, that determine the machinability of metals. (2)

[25]

QUESTION 2

2.1 Indicate whether the following statements are TRUE or FALSE by writing only 'True' or 'False' next to the question number (2.1.1–2.1.8) in the ANSWER BOOK.

2.1.1 Nonmetals are weak.

2.1.2 Nonmetals have low melting and boiling points.

2.1.3 The symbol for arsenic is Ar.

2.1.4 Nonmetals are found on the left side of the periodic table.

2.1.5 Nonmetals are good conductors of electricity.

2.1.6 The symbol for boron is B.

2.1.7 Graphite can be used as lubricant.

2.1.8 Diamonds have the highest thermal conductivity of any natural material.

(8 × 1) (8)

Copyright reserved

2.2 2.2.1 What is the symbol for iodine? (1)

2.2.2 List FOUR industrial applications of iodine. (4)

2.3 2.3.1 Give THREE mechanical properties of rubber. (3)

2.3.2 Give TWO electrical properties of rubber. (2)

2.3.3 Give THREE uses or applications of rubber. (3)

2.4

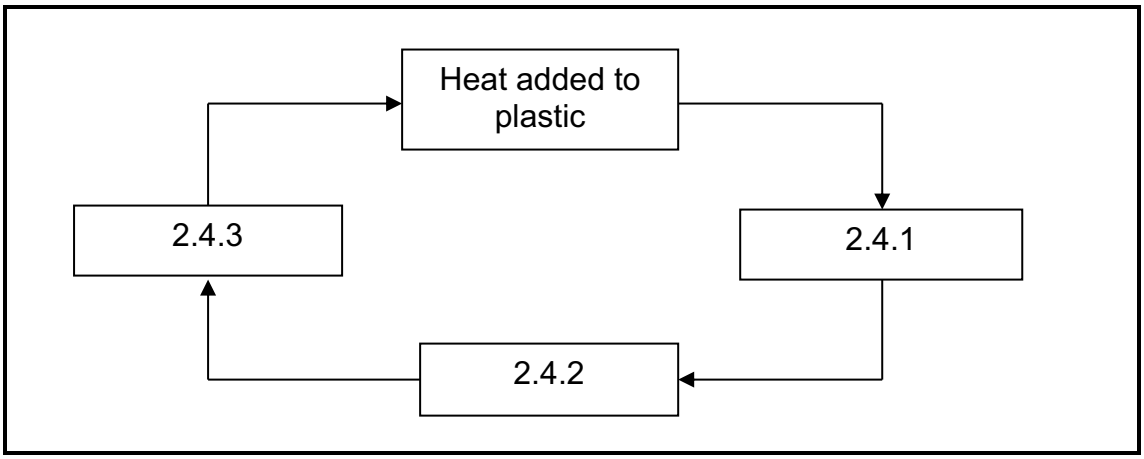

FIGURE 1

Explain each of the following steps in the thermoplastics cycle shown in FIGURE 1:

2.4.1 Step 2

2.4.2 Step 3

2.4.3 Step 4

(3 × 1) (3)

2.5 Does plastic return to its original state after the thermoplastics cycle is completed? (1)

[25]

QUESTION 3

3.1 FIGURE 2 shows a cupola furnace.

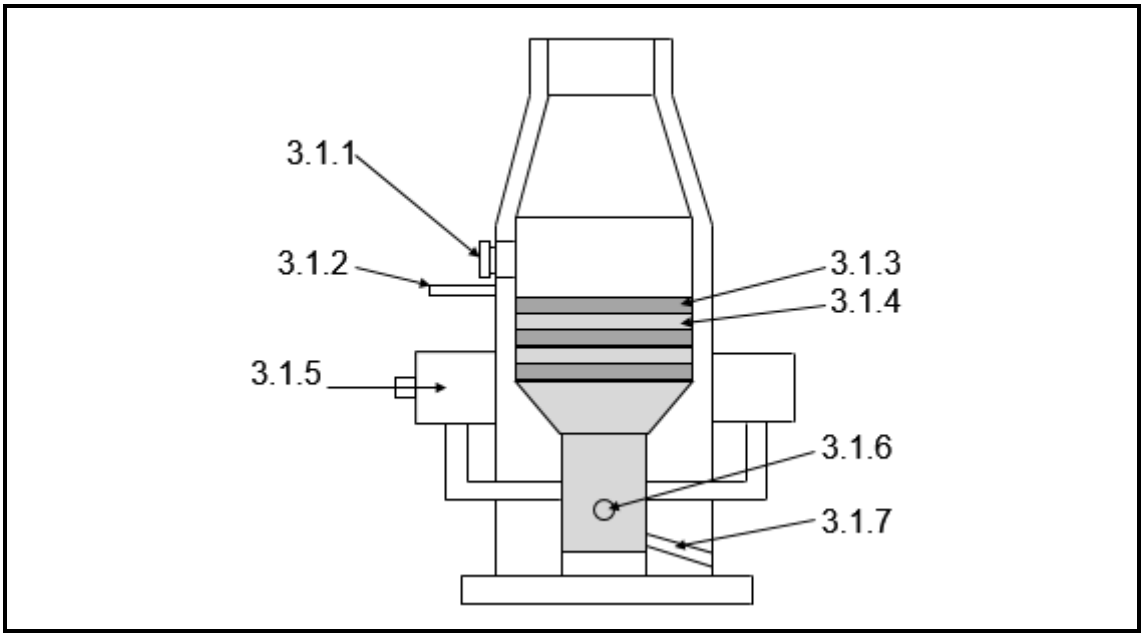

FIGURE 2

Label the cupola furnace by writing only the answer next to the question number (3.1.1–3.1.7) in the ANSWER BOOK. (7 × 1) (7)

3.2 Give FIVE advantages of an electric arc furnace. (5)

3.3 Various options are given as possible answers to the following questions. Choose the answer and write only the letter (A–D) next to the question number (3.3.1–3.3.7) in the ANSWER BOOK.

3.3.1 Which ONE of the following heat-treatment processes will reduce the brittleness of hardened steel?

A Normalising
B Spheroidising
C Annealing
D Tempering

3.3.2 Which ONE of the following statements is false?

A Spherical objects cool faster than irregular shaped objects.
B Cooling happens more rapidly in water than in oil.
C During normalising, metal is cooled to room temperature after heating.
D During carburising, carbon is introduced into a metal.

3.3.3 Which ONE of the following statements is true?

A Steel with more than 0,3% carbon content cannot be hardened.
B Steel with 0,3% or less carbon content cannot be hardened.
C Steel with exactly 0,767% carbon content cannot be hardened.
D Steel with any carbon content can be hardened.

3.3.4 When using an open flame to heat steel and quench it to harden it, the steel must be heated to …

A 50 °C to 100 °C.
B 375,76 °C to 428,48 °C.
C 800 °C to 850 °C.
D above 2 500 °C.

3.3.5 When steel is properly hardened through rapid cooling, which type of structure results in the steel?

A Austenite
B Pearlite
C Martensite
D Ledeburite

3.3.6 Which ONE of the following quenching methods is the best to quench steel?

A Insert the steel into quenching fluid and remove immediately.
B Hold the steel with a pair of tongs and pour water over it.
C Wait for eight seconds before inserting the steel into quenching fluid and cool until the steel is cold.
D Immediately after heating, insert the steel into quenching fluid and swirl it around until it is cold.

3.3.7 Which ONE of the following is not a characteristic of quenching oils?

A Correct viscosity
B High flash point to reduce fire risk
C High volatility to increase the duration of the vapour-blanket stage
D Resistance to oxidation and sludging

(7 × 1) (7)

3.4 Explain the box method of case-hardening by carburising steel to create a hardened outer layer. (5)

3.5 What is another name for the gas method of case-hardening? (1)

[25]

QUESTION 4

4.1 Complete the following sentences by choosing an item from the list below. Write only the answer next to the question number (4.1.1–4.1.5) in the ANSWER BOOK.

strain; Rockwell; bending; ε; torsional; Vickers; area; Brinell; depth; stress; σ; E

4.1.1 Hardness numbers (Vickers test) are based on … of indentation.

4.1.2 The … hardness test cannot differentiate between small differences in absolute hardness.

4.1.3 Shear strength can be defined as the maximum … that a material can withstand before shear failure occurs.

4.1.4 A … test is a simple method of testing the ductility of metals.

4.1.5 The symbol for strain is …

(5 × 1) (5)

4.2 State SEVEN essential points that must be included in a test-results report. (7)

4.3 A hardened test piece was tested in a Brinell hardness tester using a 10 mm diameter steel ball. A load of 1 000 kg was applied and the surface area of the impression was found to be 8,37 mm^2.

Calculate:

4.3.1 The diameter (d) of the impression accurate to THREE decimal places (5)

4.3.2 The Brinell hardness number (2)

4.3.3 The tensile strength of the hardened test piece in MPa (2)

$$\text{Surface area of impression} = \frac{\pi D}{2}\left\{D - \sqrt{D^2 - d^2}\right\}$$

HINT:

$$BHN = \frac{\text{load (kg)}}{\text{curved surface area of indentation (mm}^2\text{)}}$$

$$\text{Tensile strength} = 3{,}24 \times BHN$$

4.4 A force of 9 kN was used to shear a 30 mm hole in a 12 mm thick test piece.

Calculate:

4.4.1 The surface area of the cut in m^2

4.4.2 The shear stress induced in MPa

(2 × 2) (4)

HINT: $\text{Surface area} = \pi \times d \times t$

$$\tau = \frac{\text{force}}{\text{surface area}}$$

[25]

TOTAL: 100

Copyright reserved