higher education & training

Department:
Higher Education and Training
REPUBLIC OF SOUTH AFRICA

NATIONAL CERTIFICATE (VOCATIONAL)

MANUAL MANUFACTURING
NQF LEVEL 2

(6030092)

8 March 2018 (X-Paper)
09:00–12:00

This question paper consists of 7 pages and 3 addenda.

Copyright reserved

TIME: 3 HOURS
MARKS: 100

INSTRUCTIONS AND INFORMATION

1. Answer ALL the questions.
2. Read ALL the questions carefully.
3. Number the answers according to the numbering system used in this question paper.
4. All drawings must be neat and fully labelled.
5. Complete ADDENDUM A, B and C and submit them together with your ANSWER BOOK.
6. Write neatly and legibly.

NCV

QUESTION 1

1.1 Safety in a workshop is very important to employers, employees and visitors.

Explain why safety is important in a workshop. (2)

1.2 State THREE *safety hazards* and THREE *health hazards*. (3 + 3) (6)

1.3 Explain how you would protect yourself and fellow workers from being shocked by an electric appliance. (2)

1.4 Study FIGURE 1 below and state any FIVE hazards.

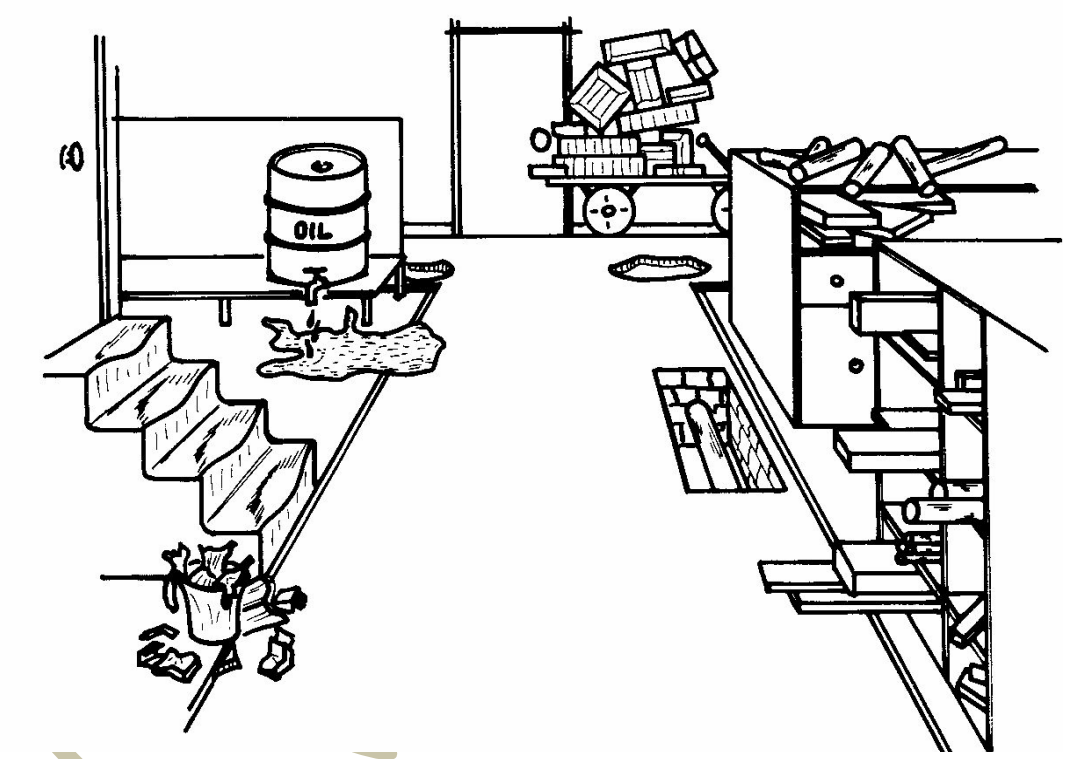

FIGURE 1

(5 × 1) (5)
[15]

QUESTION 2

2.1 When drilling needs to be done on a component during manufacturing, certain factors needs to be considered before drilling can commence.

State TWO factors to be taken into account during the drilling process.

(2 × 1) (2)

2.2 The pawl of an indexing machine is damaged and needs to be replaced. FIGURE 2 below is a freehand drawing of the pawl with the correct measurements.

Redraw on ADDENDUM A (attached), a neat, fully labelled freehand drawing of the pawl as a single-plane drawing to the given dimensions.

Ensure that you PRINT the required information when you complete ADDENDUM A and hand it in with your ANSWER BOOK.

No drawing instruments are to be used.

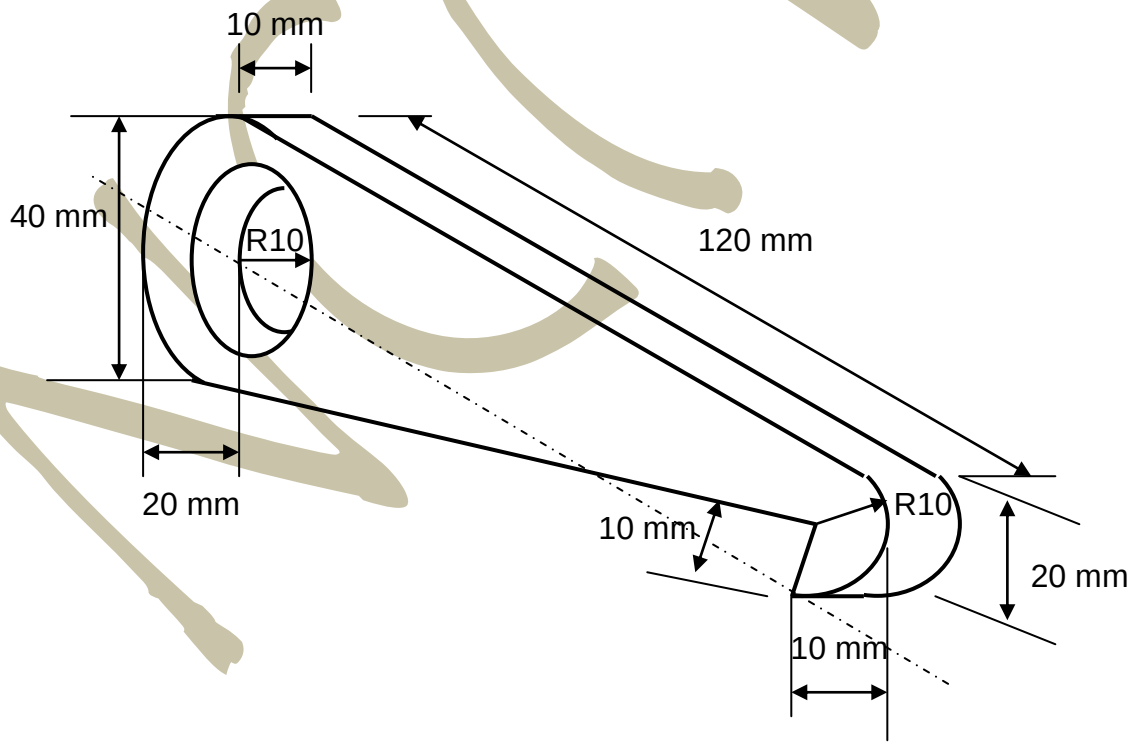

FIGURE 2

(8)
[10]

QUESTION 3

3.1 Study FIGURE 3 below of a marking off tool and answer the questions.

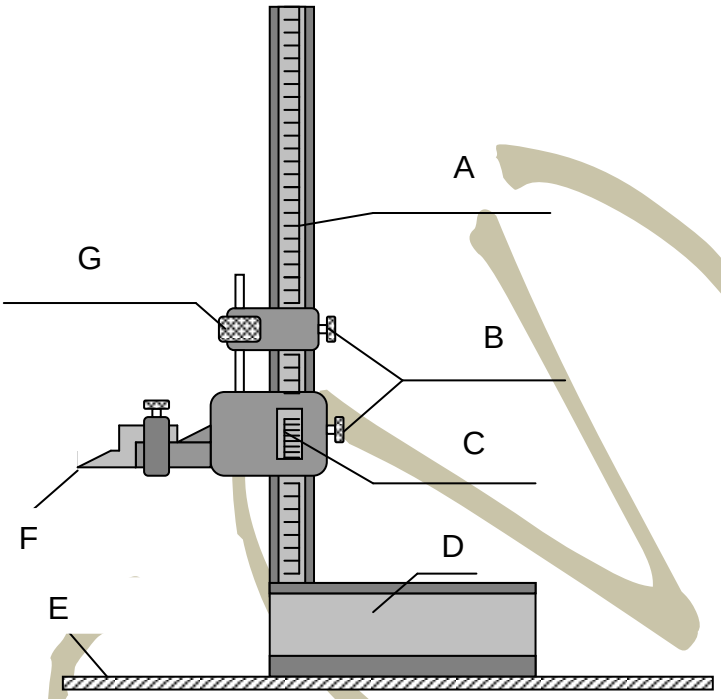

FIGURE 3

3.1.1 Name the marking off tool shown in FIGURE 3. (1)

3.1.2 Name the parts of the tool shown in FIGURE 3 by writing only the answer next to the letter (A–G) in the ANSWER BOOK. (7)

3.2 Explain, with the aid of a sketch, the procedure you will follow to check an engineering square for squareness. (4)

3.3 A hacksaw (HS 2950) was issued to you and you found that the frame is bent and cracked as shown in FIGURE 4.

Complete the faulty tool report on ADDENDUM B (attached) and hand it in with your ANSWER BOOK.

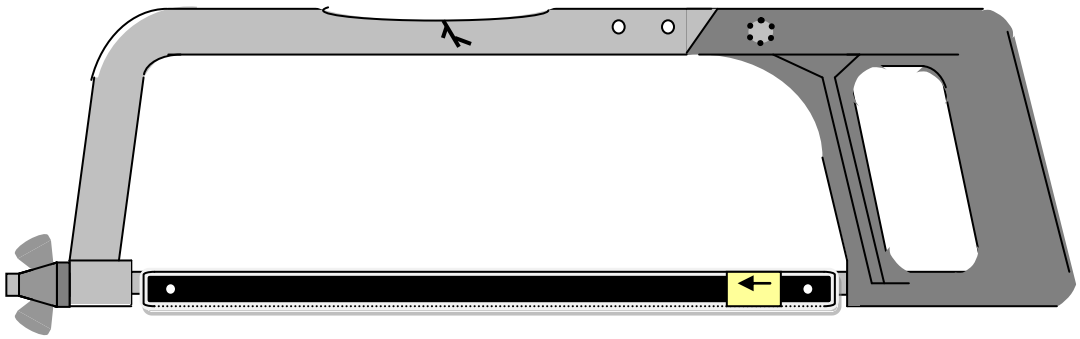

FIGURE 4 (5)

3.4 Explain what is meant by the following manual manufacturing processes:

3.4.1 Assembling

3.4.2 Clamping

3.4.3 Drilling

3.4.4 Scribing

(4 × 1) (4)

3.5 The grinding wheel of a bench grinding machine needs to be changed.

Write down the procedure to follow to change the grinding wheel. (4)

[25]

QUESTION 4

4.1 When using gas welding, three types of flames should be considered depending on the work to be done.

Illustrate by drawing THREE sketches the difference between an oxidising flame, carbonising flame and the neutral flame. (3 × 2) (6)

4.2 Gas can be used for welding or cutting.

Explain the fundamental difference between *gas welding* and *gas cutting*. (4)

4.3 Draw neat sketches of the following fillet weld joints:

4.3.1 Multiple

4.3.2 Obtuse

4.3.3 Acute

4.3.4 Mitre

4.3.5 Convex

(5 × 2) (10)

4.4 Name THREE essential personal protective equipment (PPE) items to be used when doing arc welding. (3 × 1) (3)

Copyright reserved

4.5 Name the main parts that make up the arc-welding system shown in FIGURE 5 by writing only the answer next to the question number (4.5.1–4.5.7) in the ANSWER BOOK.

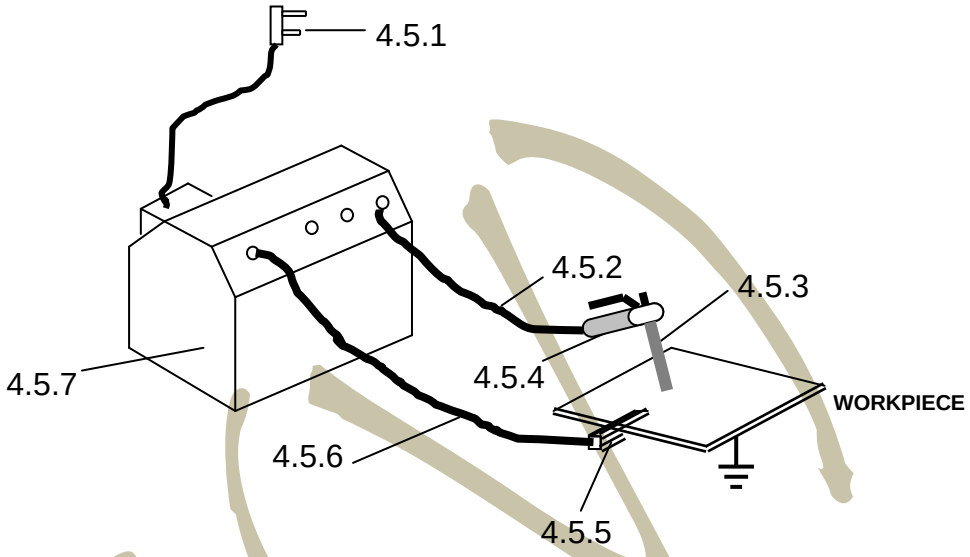

FIGURE 5

(7)
[30]

QUESTION 5

5.1 Refer to FIGURE 2 of a pawl of an indexing machine that needs to be made of mild steel material.

Complete the work plan on ADDENDUM C (attached) and hand it in with your ANSWER BOOK. (12)

5.2 Name FOUR methods to be used to perform a weld ability test on different metals. (4 × 1) (4)

5.3 Behaviour in a working environment must always be responsible and appropriate.

State FOUR things that no worker should do when working in the workshop. (4 × 1) (4)

[20]

TOTAL: 100

Copyright reserved

ADDENDUM A

EXAMINATION NUMBER: | | | | | | | | | | | | | |

QUESTION 2.2

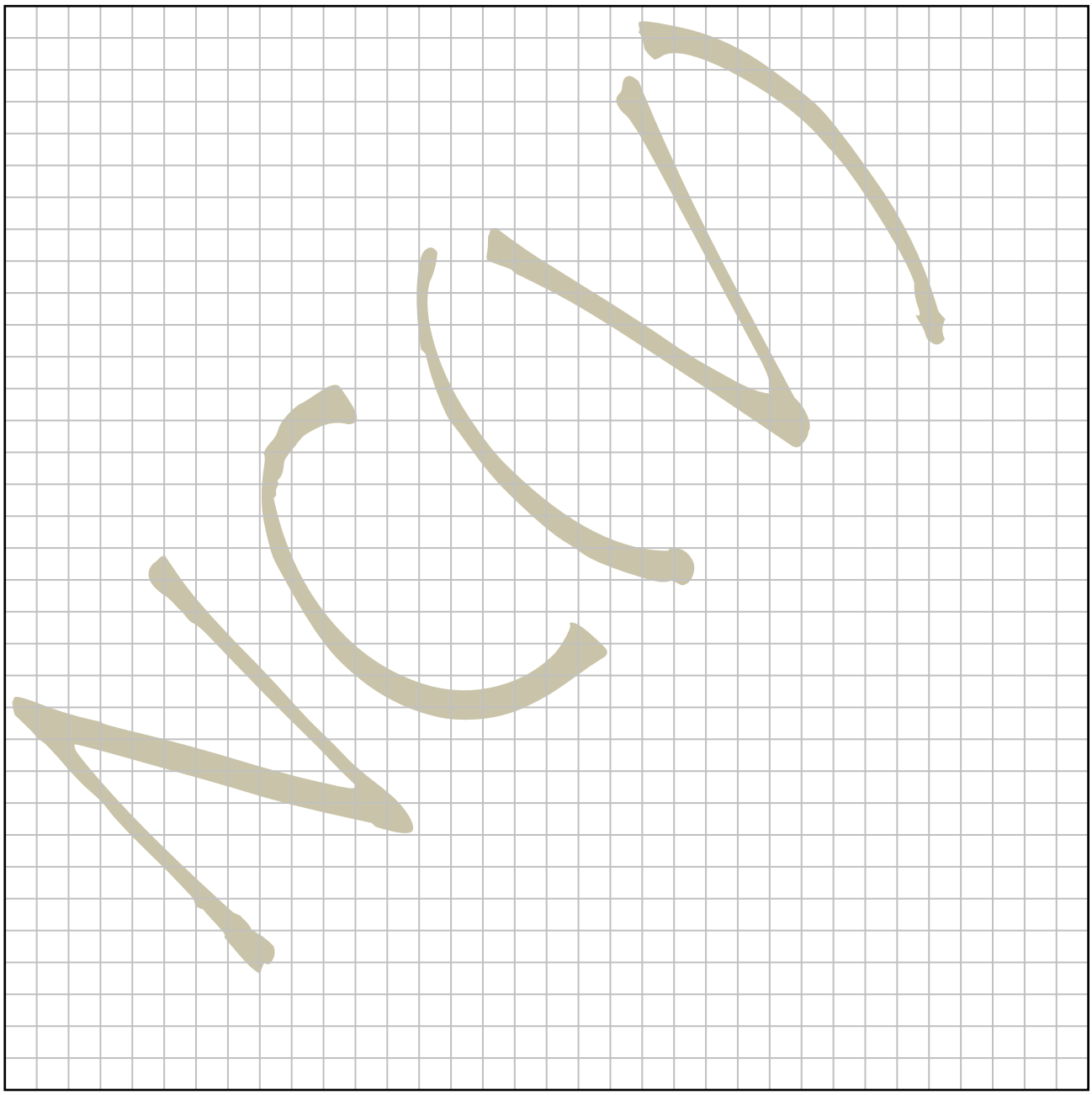

CORRECTNESS	3		NEATNESS	1	
ACCURACY	2				
LINEWORK	2		**TOTAL**	**8**	

Copyright reserved

ADDENDUM B

EXAMINATION NUMBER: | | | | | | | | | | | | | |

QUESTION 3.3

FAULTY TOOL REPORT					
Tool name:					
Description:					
Item number:			**Date:**		
Description of fault:					
Person reporting:		**Signature:**			
For Office Use					
Stock number:					
Repair of tool					
Service provider:	**Date sent:**	**Date back:**	**Cost of repairs:**	**Responsible person:**	**Signature:**

(5)

Copyright reserved

ADDENDUM C

EXAMINATION NUMBER: | | | | | | | | | | | | | |

QUESTION 5.1

WORK PLAN					
Name:					
Name of task:					
Start date:		**End date:**			
Bill of Materials					
Part name:	**No:**	**Material:**	**Size:**	**Unit cost :**	**Total cost:**
Procedural Plan State all the operations to be performed in the correct sequence and name the tools and equipment needed to accomplish the work task according to the plan.					
Item	**Operation**			**Tools**	

(12)

Copyright reserved