higher education & training

Department:
Higher Education and Training
REPUBLIC OF SOUTH AFRICA

NATIONAL CERTIFICATE (VOCATIONAL)

MANUAL MANUFACTURING
NQF LEVEL 2

(6030092)

11 December 2020 (X-paper)
09:00–12:00

This question paper consists of 8 pages.

563Q1N2011

Copyright reserved

TIME: 3 HOURS
MARKS: 100

INSTRUCTIONS AND INFORMATION

1. Answer all the questions.
2. Read all the questions carefully.
3. Number the answers according to the numbering system used in this question paper.
4. All drawings must be neat and fully labelled.
5. Write neatly and legibly.

Copyright reserved

QUESTION 1

1.1 Many safety hazards exist in a workshop.

Why should files never be used without handles?
Is using a file without a handle a safety hazard or a health hazard? (2)

1.2 Why are machines with belts and pulleys fitted with guards? (1)

1.3 What dangerous situation does the picture in FIGURE 1 illustrate?

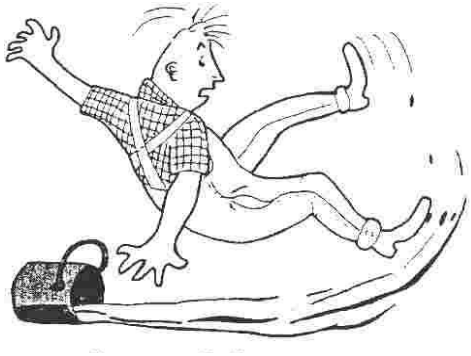

FIGURE 1 (1)

1.4 Indicate whether the following statements are TRUE or FALSE by writing only 'True' or 'False' next to the question number (1.4.1–1.4.5) in the ANSWER BOOK.

1.4.1 The correct way to use a spanner is to push it away from you.

1.4.2 Sharp pointed tools such as scribers should never be placed in one's pockets.

1.4.3 The green switching button on a machine should be fitted with a mushroom head.

1.4.4 Ball bearings can be tested by spinning them with compressed air on one's fingers.

1.4.5 Swarf from machines should be cleared once a week.

(5 × 1) (5)

1.5 You find a worker writhing in agony on the workshop floor as he is in contact with an open electrical wire. You need to act fast to save his life and preventing yourself from being shocked.

Explain FOUR possible actions you may take to save his life. (4)

1.6 Name TWO contributions one can do towards the prevention of environmental hazards in a workplace. (2)

[15]

QUESTION 2

2. 1 The following lines used in engineering drawings are shown in FIGURE 2: outline, centre line, construction line and hidden detail. Match the names to the lines and only write the answer next the letters (A–D) in the ANSWER BOOK.

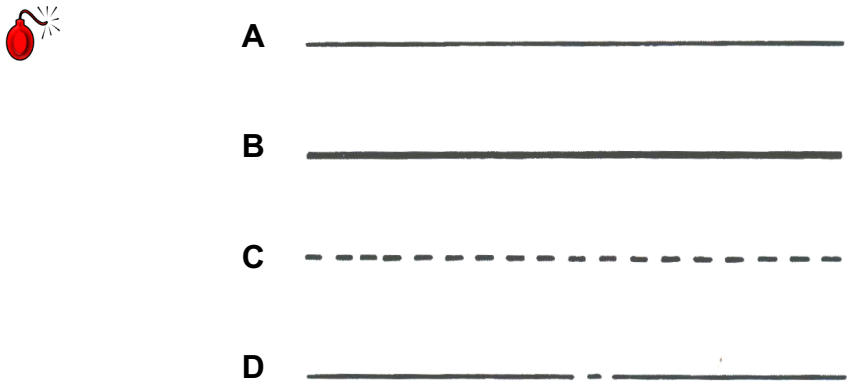

FIGURE 2 (4)

2.2 Indicate whether the following statements are TRUE or FALSE by writing only 'True' or 'False' next to the question number (2.2.1–2.2.3) in the ANSWER BOOK.

2.2.1 A 2D drawing shows length, breadth and width.

2.2.2 Diameter is equal to twice the radius.

2.2.3 Angles cannot be drawn by using a protractor.

(3 × 1) (3)

2.3 Three different locking devises from CAD drawings are shown in FIGURE 3 below. Identify the THREE devices by writing only the answer next to the letters (A–C) in the ANSWER BOOK.

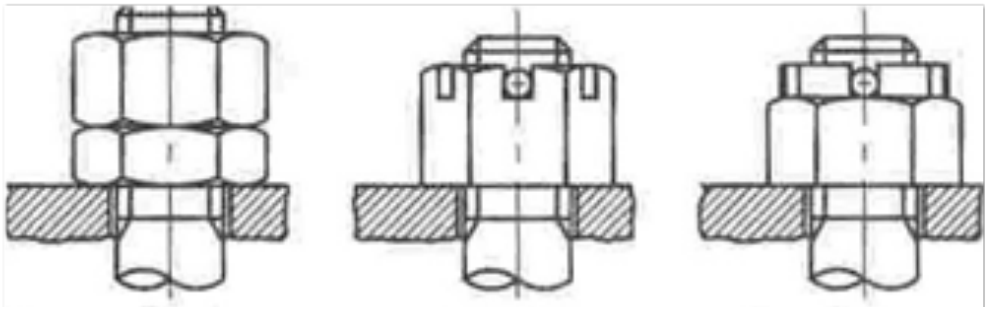

A B C

FIGURE 3 (3)

[10]

QUESTION 3

3.1 Name the parts of a file given in FIGURE 4 by writing only the answer next to the question number (3.1.1–3.1.5) in the ANSWER BOOK.

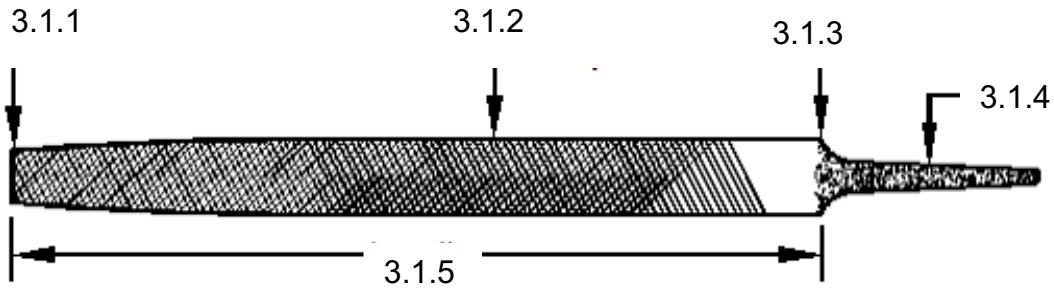

FIGURE 4 (5)

3.2 Name ONE material of which the soft insert of a soft hammer can be made. (1)

3.3 What is the finest accuracy that can be read on a vernier protractor? (2)

3.4 What is the gauge in FIGURE 5 called?

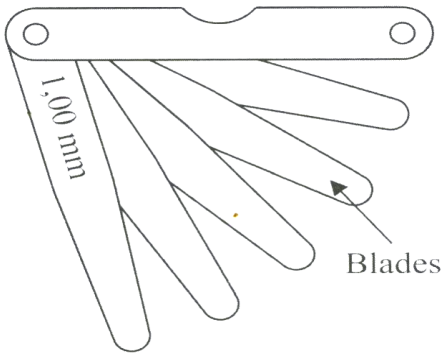

FIGURE 5 (1)

3.5 The sketch in FIGURE 6 shows a reading taken with a surface gauge. What other gauge could be used to obtain the same result?

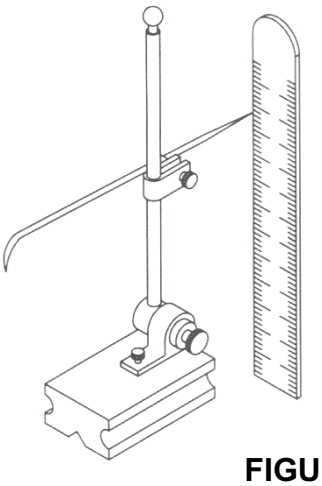

FIGURE 6 (2)

3.6 A circle needs to be scribed on a steel plate.

State the THREE instruments that one would use to do so. (3)

3.7 The sketch in FIGURE 7 shows the graduations on a depth micrometer. Write down the reading shown.

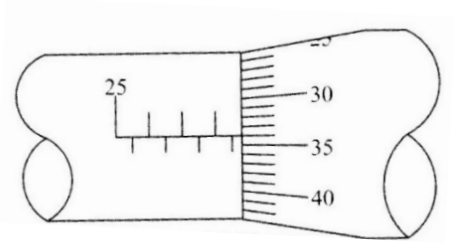

FIGURE 7 (2)

3.8 A hacksaw blade became blunt too soon.

Give THREE reasons why this could happen. (3)

3.9 Name any TWO types of reamers frequently used in a workshop. (2)

3.10 A 15 A plug needs to be replaced on an electric drill.

Make a simple sketch from the top showing the correct positions of the 3 wires. Include the wiring colours and their functions in the sketch. (6)

3.11 How would an electrician's screwdriver differ from other screwdrivers? (1)

3.12 Two machines that can be used to make holes in work pieces are shown in FIGURE 8.

Name these two machines by writing only the answer next to the letters (A–B) in the ANSWER BOOK.

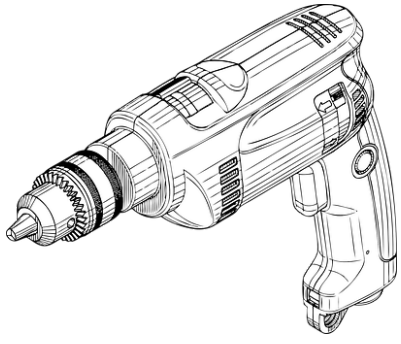

A

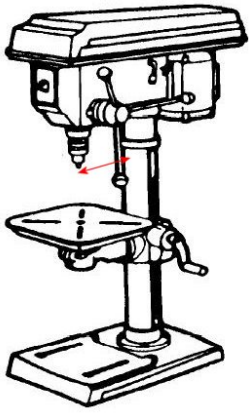

B

FIGURE 8 (2)

[30]

QUESTION 4

4.1 Different flames are used gas welding. Draw a carbonising flame used in gas welding. (2)

4.2 Indicate whether the following statements are TRUE or FALSE by writing only 'True' or 'False' next to the question number (4.2.1–4.2.5) in the ANSWER BOOK.

4.2.1 Solder consists of lead and zinc.

4.2.2 Welding gloves are made of wool.

4.2.3 Soldering is a process of joining two metals together.

4.2.4 Flux is only available in solid form.

4.2.5 In an emergency, sunglasses can be used instead of welding goggles.

(5 × 1) (5)

4.3 Draw a simple sketch of a bevel weld. (2)

4.4 Explain the meaning of the welding symbol shown in FIGURE 9 below.

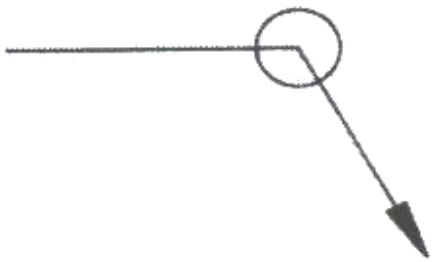

FIGURE 9 (1)

4.5 Make a simple sketch of an electric soldering iron and insert the names of any FOUR parts of such a soldering iron. (6)

4.6 Name TWO advantages of a self-darkening welding helmet. (2)

4.7 List THREE PPE items to be used when doing gas welding. (3)

4.8 Make a sketch to show how one would connect an arc welding machine to a metal table onto which a work piece is clamped. (4)

[25]

Copyright reserved

QUESTION 5

5.1 Name THREE non-ferrous metals. (3)

5.2 Name THREE uses of Tufnol. (3)

5.3 What colour would a floor in the working space normally be painted in? (1)

5.4 Explain term *housekeeping.* (2)

5.5 Sketch a prohibition sign and write in the colours on the sketch. (3)

5.6 List TWO uses of copper and TWO uses of lead. (2 + 2) (4)

5.7 Explain why it is important to have a work plan before one starts manufacturing a work piece. (4)
[20]

TOTAL: 100

Copyright reserved