higher education & training

Department:
Higher Education and Training
REPUBLIC OF SOUTH AFRICA

NATIONAL CERTIFICATE (VOCATIONAL)

MACHINE MANUFACTURING
NQF LEVEL 3

(6030203)

19 November 2018 (X-Paper)
09:00–12:00

This question paper consists of 9 pages.

NCV

TIME: 3 HOURS
MARKS: 100

INSTRUCTIONS AND INFORMATION

1. Answer ALL the questions.
2. Read ALL the questions carefully.
3. Number the answers according to the numbering system used in this question paper.
4. All drawings must be neat and well balanced.
5. Write neatly and legibly.

NCM

QUESTION 1

1.1 Identify the drill press shown in FIGURE 1 below. (1)

1.2 Name FOUR components marked (1.2.1–1.2.4) in FIGURE 1.

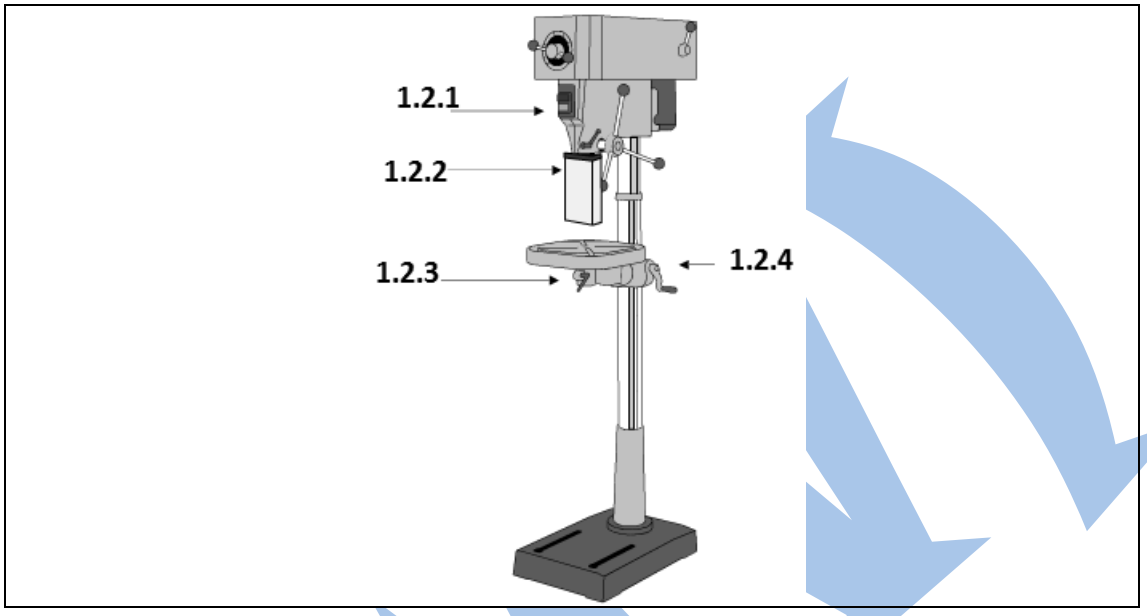

FIGURE 1 (4)

1.3 Name FIVE safety precautions one would observe when operating a drilling machine. (5)

1.4 Various options are provided as possible answers to the following questions. Choose the answer and write only the letter (A–D) next to the question number (1.4.1–1.4.5) in the ANSWER BOOK.

1.4.1 The difference between pedestal sensitive type and the pillar sensitive type drilling machine is …

A one is portable.
B one is driven by pulley and V-belt and the other driven by gears.
C one operates by single phase.
D one is operated from the work bench.

1.4.2 Which ONE of the following is NOT a marking off media?

A Marking off table
B Marking blue
C Copper sulphate
D Chalk

1.4.3 A tool which is used with micrometer to transfer measurement:

A Outside micrometre
B Vernier caliper
C Telescopic gauge
D Vernier height gauge

1.4.4 Ferrous metal is a metal that …

A contains no carbon.
B contains no iron.
C contains both copper and brass.
D contains iron.

1.4.5 Case hardening is a heat treatment process where …

A carbon is removed from the steel.
B low carbon steel is buried in carbon.
C brittleness is reducing and increase toughness.
D high carbon content is heated.

(5 × 1) (5)
[15]

QUESTION 2

2.1 Refer to TABLE 1 and choose an item from COLUMN B that matches a description in COLUMN A. Write only a letter (A–F) next to the question number (2.1.1–2.1.5) in the ANSWER BOOK.

COLUMN A		COLUMN B	
2.1.1	Prevent contact between moving parts and the body	A	trip guards
2.1.2	Prevents machines from operating unless guards are closed	B	fixed guards
2.1.3	Automatically move into position	C	distance guards
2.1.4	Prevent access to dangerous areas	D	interlocking guards
2.1.5	Stop operating when a person get into position	E	automatic guards
		F	machine guards

(5 × 1) (5)

2.2 Name the TWO groups in which machine guards are classified and give ONE example of each. (4)

2.3 Give ONE reason as to why machine guards are so important. (1)

2.4 Complete the following sentences by filling the missing word(s). Write only the word(s) next to the question number (2.4.1–2.4.4) in the ANSWER BOOK.

2.4.1 Storage device is a hard disk … permanently inside your computer. (1)

2.4.2 AUTOSNAP command enables automatically placing of object without having to … ONSNAP. (1)

2.4.3 Return button is the … button of the keyboard. (1)

2.4.4 Before starting your CAD drawing you should … how you are going to make use of the … (2)

[15]

QUESTION 3

3.1 The following dimensions are given of TWO mating components:

SHAFT dia. 85 $^{+0,260}_{-0,260}$ mm BUSH dia. 85 $^{+0,870}_{-0,000}$ mm

Determine the following:

3.1.1 Nominal size (1)

3.1.2 Low limit and high limit of the shaft (2)

3.1.3 Low limit and high limit of the bush (2)

3.1.4 Tolerance of the shaft (1)

3.1.5 Tolerance of the bush. (1)

3.2 By means of free-hand sketch draw the two mating components (with given dimensions shown in QUESTION 3.1 above) that FIT in a clearance fit.

NOTE: The sketch should indicate the lower limit and the upper limit of the fit. (4)

3.3 Define the following classes of fits as found in ISO of fits and limits and give one example of each.

3.3.1 Interference it

3.3.2 Clearance fit

(2 × 2) (4)

[15]

QUESTION 4

4.1 FIGURE 2 below shows a machining process with a steady.

4.1.1 Identify the type of machine being used and what type of machining process is being performed here in FIGURE 2. (2)

4.1.2 Label the machine components marked (4.1.2–4.1.6) in FIGURE 2.

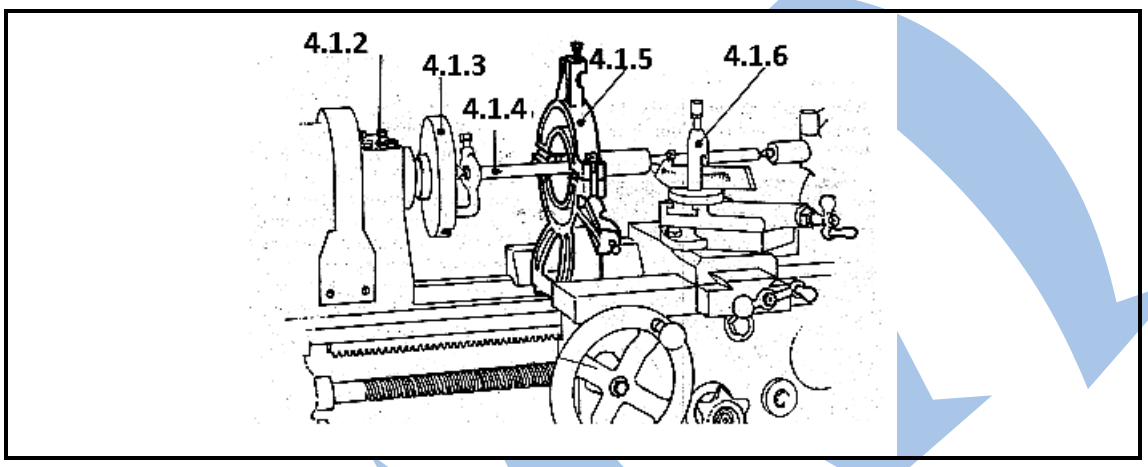

FIGURE 2 (5)

4.2 FIGURE 3 shows a very important machine in the machining workshop.

Identify the components marked (4.2.1–4.2.4) in FIGURE 3.

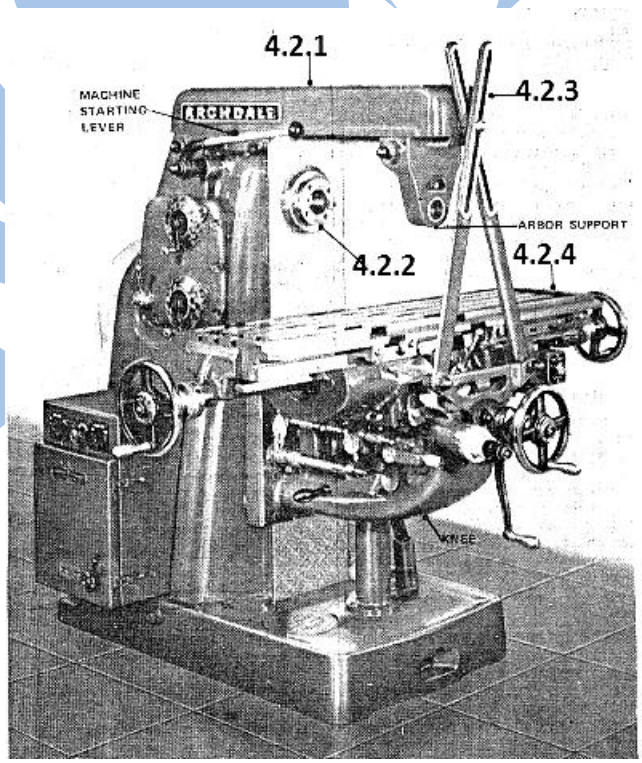

FIGURE 3 (4)

4.3 Name FIVE machining processes that can be performed in this particular machine in FIGURE 3. (5)

4.4 Compare the machining process between the machine shown in FIGURE 2 and the machine shown in FIGURE 3 in terms of the following:

4.4.1 Drilling of the work piece

4.4.2 Cutting tools

(2 × 2) (4)
[20]

QUESTION 5

5.1 Carriage is shown in FIGURE 4. It is made up of FIVE different components. Label the components marked (5.1.1–5.1.5) in the ANSWER BOOK.

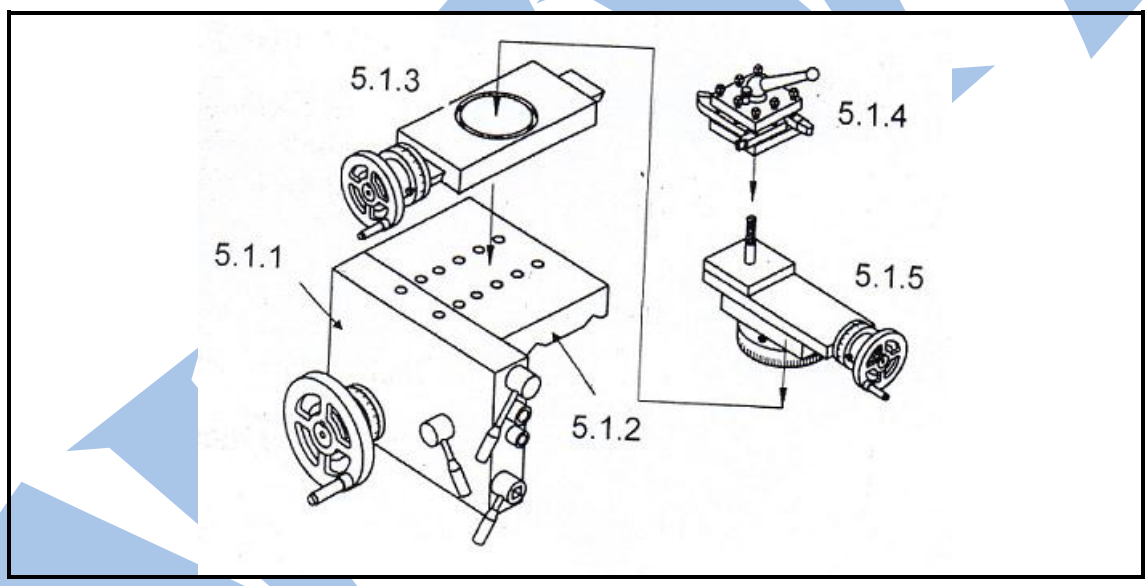

FIGURE 4 (5)

5.2 As a turner machinist you are being tasked to machine a square thread. When you got unto the machine there was NO chuck in the spindle of the machine. Instead chuck jaws and chuck key are lying on top of the work bench.

Develop FIVE steps that you will follow in order to set-up the machine to be ready for machining process of screw cutting. (5)

Copyright reserved

5.3 Different machining processes that can be performed on centre lathe are shown on FIGURE 5. Identify the processes. Write only the number (5.3.1–5.3.6) in the ANSWER BOOK.

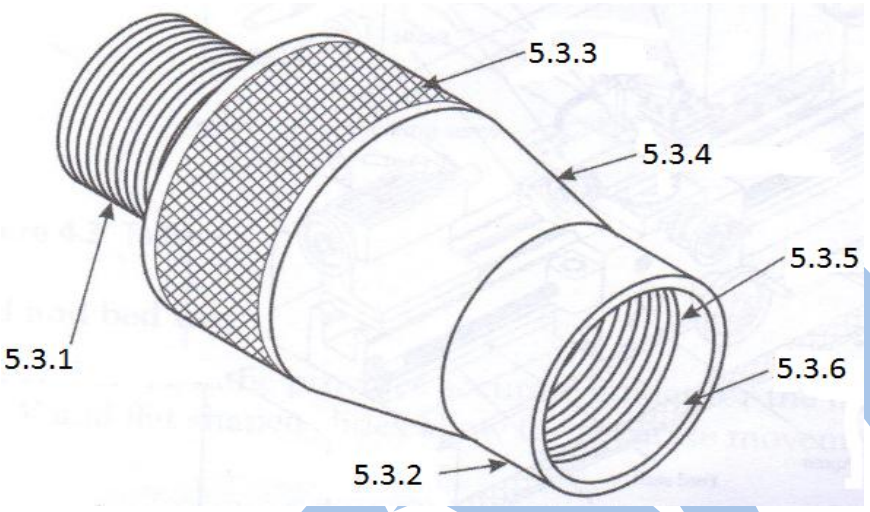

FIGURE 5 (6)

5.4 A milling machine is used to mill 17 teeth on a gear blank.

Calculate the required indexing using a Cincinnati dividing head. Index plate is given below.

Cincinnati

Side 1	24	25	28	30	34	37	38	39	41	42	and	43
Side 2	46	47	49	51	53	54	57	58	59	62	and	66

(5)

5.5 There are approximately FIVE Lathe Centres available in the fitting and machining workshop. FIGURE 6 shows TWO lathe centres.

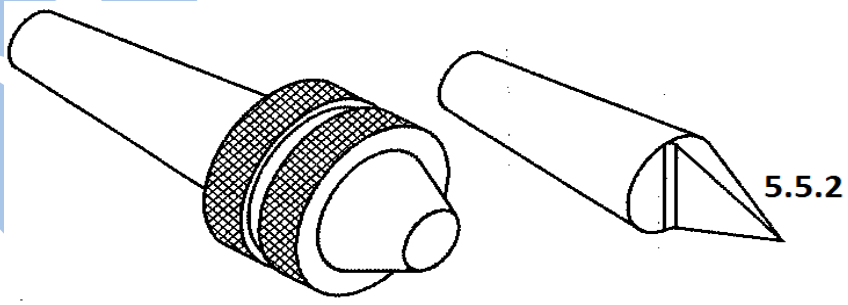

FIGURE 6

5.5.1 Name the Lathe Centre marked (5.5.1) below. (1)

5.5.2 Name the Lathe Centre marked (5.5.2) below. (1)

5.5.3 Briefly discuss the function of a Lathe Centre on the machine. (3)

Copyright reserved

5.6 A milling cutter is 100 mm in diameter and has 14 teeth. The cutting speed for the material is given at 24 meters per minute and the feed per tooth is 0,051 mm.

What is the rotational frequency and feed rate? (5)

5.7 Reaming can be done both by hand and with machine. FIGURE 7 shows a reaming process. Label all the tools marked (5.7.1–5.7.4) in the ANSWER BOOK.

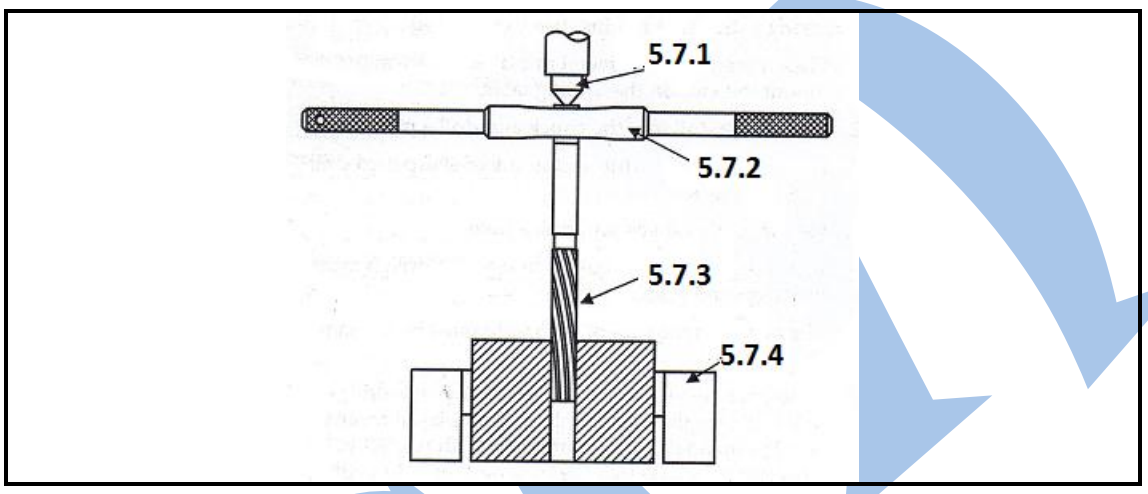

FIGURE 7

(4)
[35]

TOTAL: 100

Copyright reserved