higher education & training

Department:
Higher Education and Training
REPUBLIC OF SOUTH AFRICA

NATIONAL CERTIFICATE (VOCATIONAL)

MACHINE MANUFACTURING
NQF LEVEL 3

(6030203)

7 March 2018 (X-Paper)
09:00–12:00

This question paper consists of 8 pages.

NCV

Copyright reserved

TIME: 3 HOURS
MARKS: 100

INSTRUCTIONS AND INFORMATION

1. Answer ALL the questions.
2. Read ALL the questions carefully.
3. Number the answers according to the numbering system used in this question paper.
4. ALL drawings must be neat and well balanced.
5. Write neatly and legibly.

NCV

QUESTION 1

1.1 Choose an item from COLUMN B that matches a description in COLUMN A. Write only the letter (A-F) next to the question number (1.1.1–1.1.5) in the ANSWER BOOK.

COLUMN A		COLUMN B	
1.1.1	A person operating any machinery which requires constant attention in order to avoid an accident, shall under no circumstances leave his/her post	A	unsafe act
		B	ring test
		C	OSH Act 85 of 1993
		D	telescopic gauge
1.1.2	Removing material from the top of the hole to make sure the screw flushes	E	countersink
		F	safety rule
1.1.3	Using the right tool for the right job		
1.1.4	A tool used to transfer measurements		
1.1.5	Tapping the grinding wheel gently with a non-metal tool		

(5 × 1) (5)

1.2 The diagram in FIGURE 1 shows a drill bit that has been sharpened.

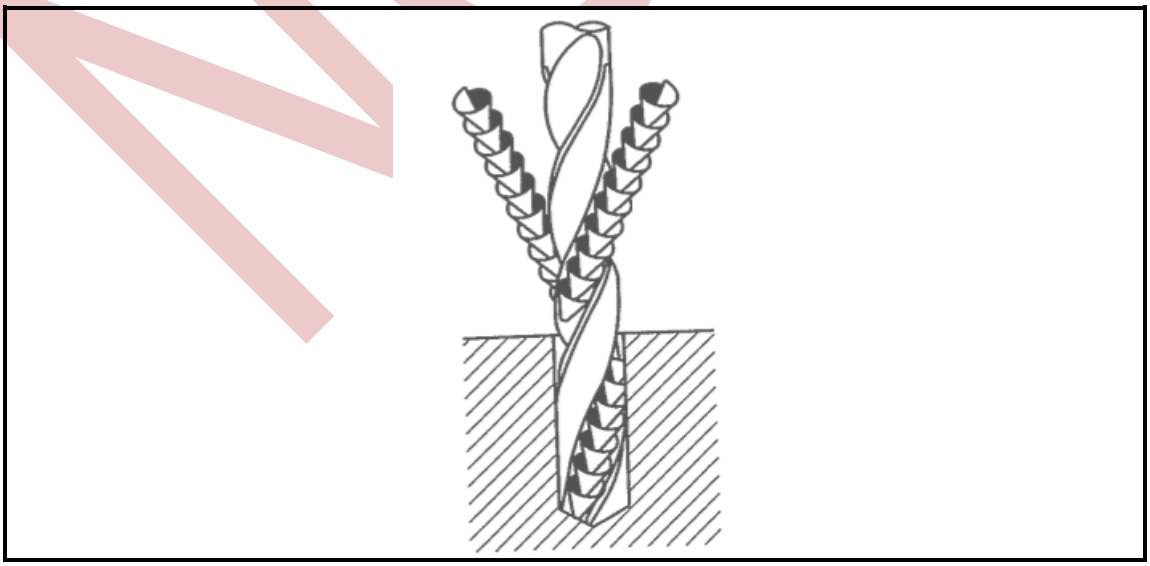

FIGURE 1 (3)

Has the drill bit been correctly sharpened? Answer YES or NO. Give TWO reasons for your answer.

Copyright reserved

1.3 Various options are given as possible answers to the following questions. Choose the answer and write only the letter (A–C) next to the question number (1.3.1–1.3.3) in the ANSWER BOOK.

1.3.1 The function of cutting fluid is to …

A be absorbed by the work piece.
B minimise the effect of heat and friction.
C cut the work piece.

1.3.2 A centre lathe is used for the following:

A Cutting wires
B Cutting triangular structures
C Machine taper turning on shafts

1.3.3 Which ONE of the following instruments is NOT for marking-off purposes?

A Dividers
B Steel rule
C Depth micrometre

(3 × 1) (3)

1.4 1.4.1 Show the difference between a *centre punch* and a *dotting punch* by means of free-hand sketch. (2)

1.4.2 State the process in which each is used during marking off. (2)

[15]

QUESTION 2: CAD APPLICATIONS

2.1 Categorise the items below used in engineering applications, into output devices and input devices. Tabulate your answer.

digital camera, printers, plotters, scanners, keyboards

(5)

2.2 Write down a FIVE-step procedure to produce a CAD drawing. (5)

2.3 Name any THREE CAD programs that are used in the industry. (3)

2.4 Explain the following elementary terminology used in CAD applications:

2.4.1 Crosshair

2.4.2 Ortho mode

(2 × 1) (2)

[15]

QUESTION 3: FITS AND LIMITS

3.1 FIGURE 2 below shows one type of measuring instrument used in the manufacturing engineering workshop.

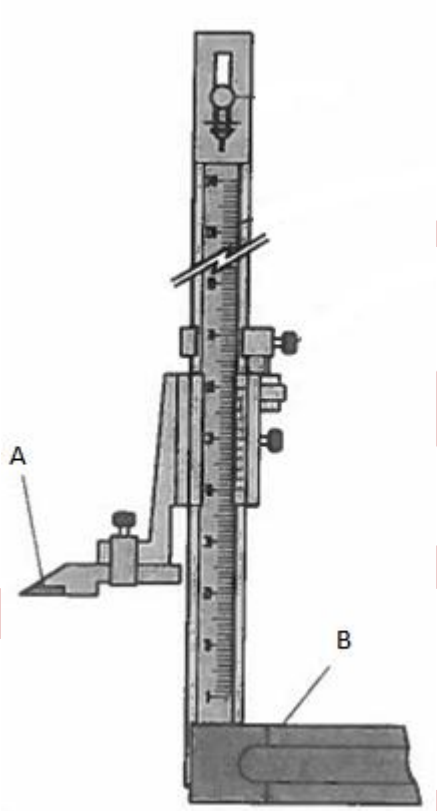

FIGURE 2

3.1.1 What is the name of the measuring instrument shown in FIGURE 2? (1)

3.1.2 Label the parts marked A and B. Write only the answer next to the letter (A–B) in the ANSWER BOOK. (2)

3.2 The size of a machined round bar is given as follows: 150,00±0,04.

Determine the following:

3.2.1 Actual size

3.2.2 Upper deviation

3.2.3 Lower deviation

3.2.4 Nominal size

3.2.5 Tolerance

(5 × 1) (5)

Copyright reserved

3.3 Explain the following terms relating to fits and limits:

3.3.1 Shrink fit

3.3.2 Sliding fit

3.3.3 Push fit

(3 × 1) (3)

3.4 Make free-hand sketches of the symbols that relate to the following, according to the surface of the material.

3.4.1 Flame-cut and hand-dressed by grinding

3.4.2 Case-hardened

3.4.3 Galvanised

3.4.4 Flame-hardened

(4 × 1) (4)
[15]

QUESTION 4: CENTRE LATHE

4.1 FIGURE 3 below shows one of the processes performed on a centre lathe.

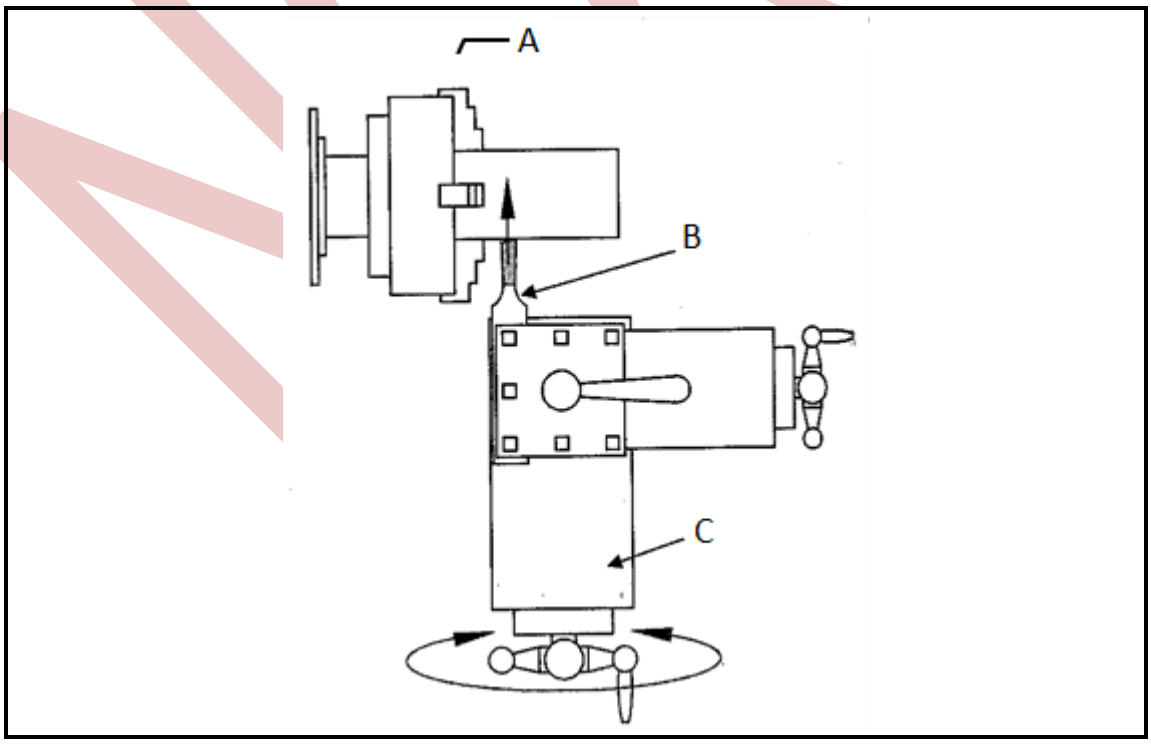

FIGURE 3

4.1.1 Label the parts of the tailstock marked A–C. (3)

4.1.2 Name the process which is being performed on the centre lathe. (2)

4.2 Lathe steadies are used to support very long or thin work pieces that would otherwise bend when machining. There are two kinds of lathe steadies: travelling and fixed.

4.2.1 How is the travelling steady mounted on the lathe bed?

4.2.2 How is the fixed steady mounted on the lathe bed?

(2 × 1) (2)

4.3 As a turner machinist, you are required to machine a bush according to the sketch shown in FIGURE 4 below. Write down TEN steps to be followed to carry out this task, from selecting the right stock from the stores.

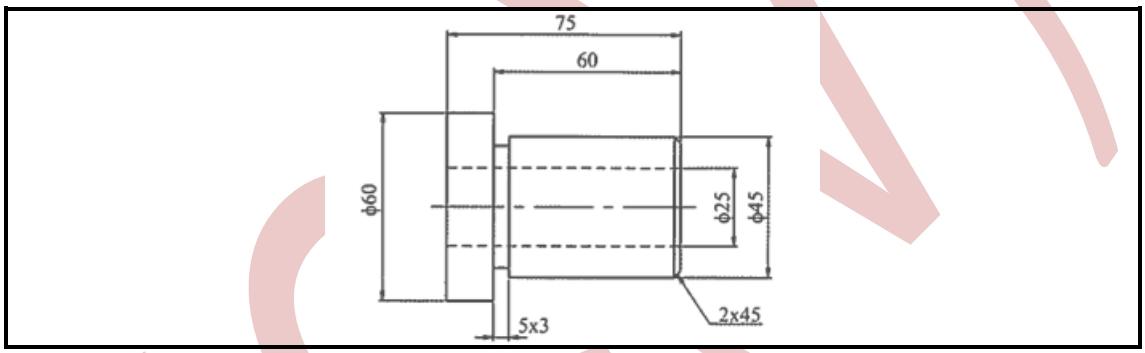

FIGURE 4 (10)

4.4 Name THREE taps which make up a typical tap-set for cleaning a thread. (3)

[20]

QUESTION 5: CENTRE LATHE AND MILLING MACHINE

5.1 Calculate, in millimetres per minute, the feed of a 70 mm diameter cutter with 12 teeth, operating at a cutting speed of 25 metres per minute and a feed of 0,08 per tooth. (5)

5.2 State THREE safety measures that have to be considered when operating a milling machine. (3)

5.3 Calculate the index crank movement for an angle of 55° using a Cincinnati dividing head. The details of the Cincinnati dividing head are:

Side 1	24	25	28	30	34	37	38	39	41	42	and	43
Side 2	46	47	49	51	53	54	57	58	59	62	and	66

(5)

5.4 Name FOUR different types of indexing methods that are performed with a universal dividing head. (4)

Copyright reserved

5.5 Name any THREE milling machine processes that can be performed on a milling machine. (3)

5.6 Give TWO malfunctions (problems) that can occur while operating a milling machine. (2)

5.7 FIGURE 6 below shows a machine table of a milling machine. Label the parts marked A–E. Write only the answer next to the letter (A–E) in the ANSWER BOOK.

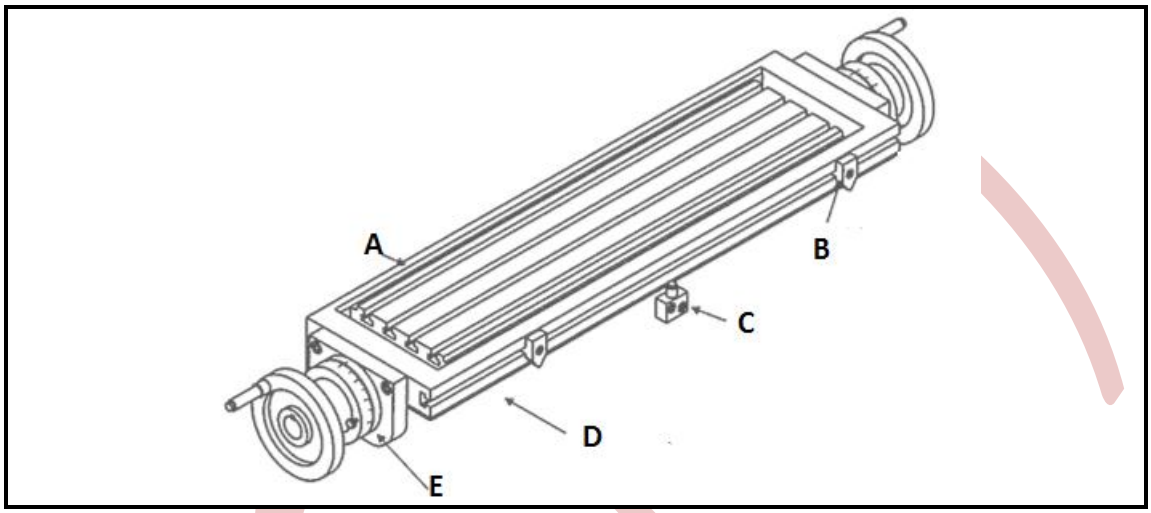

FIGURE 6 (5)

5.8 By means of a free-hand sketch, show the milling machine process known as down-cut milling (climb milling). Show the direction of both the cutter and the table. (3)

5.9 Write down the FIVE steps of performing a knurling operation on a centre lathe. (5)

[35]

TOTAL: 100

Copyright reserved