higher education & training

Department:
Higher Education and Training
REPUBLIC OF SOUTH AFRICA

NATIONAL CERTIFICATE (VOCATIONAL)

MACHINE MANUFACTURING
NQF LEVEL 3

(6030203)

6 March 2020 (X-paper)
09:00–12:00

This question paper consists of 9 pages.

283Q1S2006

Copyright reserved

TIME: 3 HOURS
MARKS: 100

INSTRUCTIONS AND INFORMATION

1. Answer all the questions.
2. Read all the questions carefully.
3. Number the answers according to the numbering system used in this question paper.
4. All drawings must be neat and well balanced.
5. Write neatly and legibly.

Copyright reserved

QUESTION 1



FIGURE 1

1.1 Identify the machine in FIGURE 1. (1)

1.2 Name FOUR machining processes that can be performed by the machine in FIGURE 1. (4)

1.3 Name FOUR machine components found in the machine in FIGURE 1. (4)

1.4 Give TWO advantages and TWO disadvantages of the machine in FIGURE 1. (2 + 2) (4)

1.5 Give TWO examples of unsafe clothing to avoid when working with rotating machinery. (2)

[15]

QUESTION 2

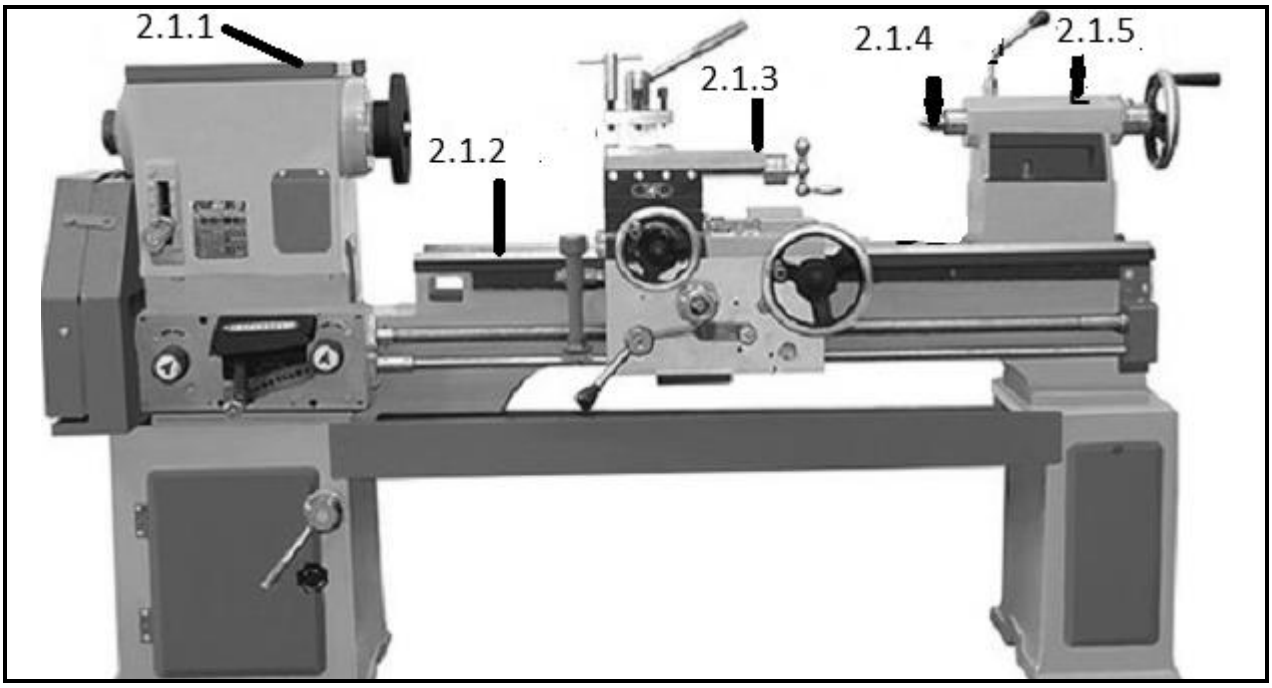

FIGURE 2

2.1 Label the machine components in FIGURE 2 by writing only the answer next to the question number (2.1.1–2.1.5) in the ANSWER BOOK. (5 × 1) (5)

2.2 Name THREE taper-turning methods that can be performed on the machine in FIGURE 2. (3)

2.3 Compare the two machines shown in FIGURE 1 and FIGURE 2 in terms of:

2.3.1 Chuck

2.3.2 Cutting tools

(2 × 1) (2)

2.4 Explain the function of the lathe steady. (1)

2.5 Name TWO types of steadies and explain where to mount it in the machine in FIGURE 2. (4)

[15]

QUESTION 3

3.1 Choose a term from COLUMN B that matches a description in COLUMN A. Write only the letter (A–F) next to the question number (3.1.1–3.1.5) in the ANSWER BOOK.

COLUMN A		COLUMN B	
3.1.1	Prevent contact between moving parts and the body	A	trip guards
3.1.2	Prevent machines from operating unless guards are closed	B	fixed guards
3.1.3	Automatically move into position	C	distance guards
3.1.4	Prevent access to dangerous areas	D	interlocking guards
3.1.5	Stop operating when a person gets into position	E	automatic guards
		F	machine guards

(5 × 1) (5)

3.2 Indicate whether the following statements are TRUE or FALSE by writing only 'True' or 'False' next to the question number (3.2.1–3.2.5) in the ANSWER BOOK.

3.2.1 CAM means computer-aided measurement.

3.2.2 The advantage of using a CAD software package is that it is cheap.

3.2.3 The ellipse command in CAD can be used to draw a circle if used properly.

3.2.4 A CAD application is suitable for repetitive work.

3.2.5 CNC-programming is not suitable for the purpose of CAD in manufacturing.

(5 × 1) (5)

3.3 Various options are given as possible answers to the following questions. Choose the answer and write only the letter (A–D) next to the question number (3.3.1–3.3.5) in the ANSWER BOOK.

3.3.1 Case-hardening is a heat-treatment process where …

A carbon is removed from steel.
B low-carbon steel is buried in carbon.
C brittleness is reduced and toughness increased.
D high-carbon content is heated.

3.3.2 Tool used with micrometer to transfer measurement:

A Outside micrometer
B Vernier callipers
C Telescopic gauge
D Vernier height gauge

3.3.3 Ferrous metal contains …

A no carbon.
B no iron.
C both copper and brass.
D iron.

3.3.4 Test to distinguish between cast iron and steel:

A Fracture test
B Fibre test
C Grain test
D Hardening test

3.3.5 A dial test indicator is used for …

A measuring angles.
B testing power supply.
C obtaining the size of holes.
D testing concentricity.

(5 × 1) (5)
[15]

QUESTION 4

4.1 Make labelled freehand drawings of each of the following machine symbols:

4.1.1 Chamfer

4.1.2 Threaded hole

4.1.3 Counterbore

4.1.4 Reaming

4.1.5 Countersinking

(5 × 1) (5)

4.2 Your instructor has given you the task to machine engine castings and bore 12 mm diameter counterbore cap-screw holes.

4.2.1 Draw a neat sectional drawing showing how the cap-head screw fits into the counterbore cap-screw holes. (2)

4.2.2 Name the TWO main tools needed to perform the task on the engine castings. (2)

4.2.3 The drill bit breaks during drilling.

Give TWO reasons why the drill bit will break and state TWO corrective measures to prevent this problem from happening again.

(2 + 2) (4)

4.2.4 After completing the machining and boring of the engine castings, it is standard practice to record and report all information regarding the job.

List THREE important pieces of information to record. (3)

4.3 FIGURE 3 shows a very important machine in the manufacturing industry.

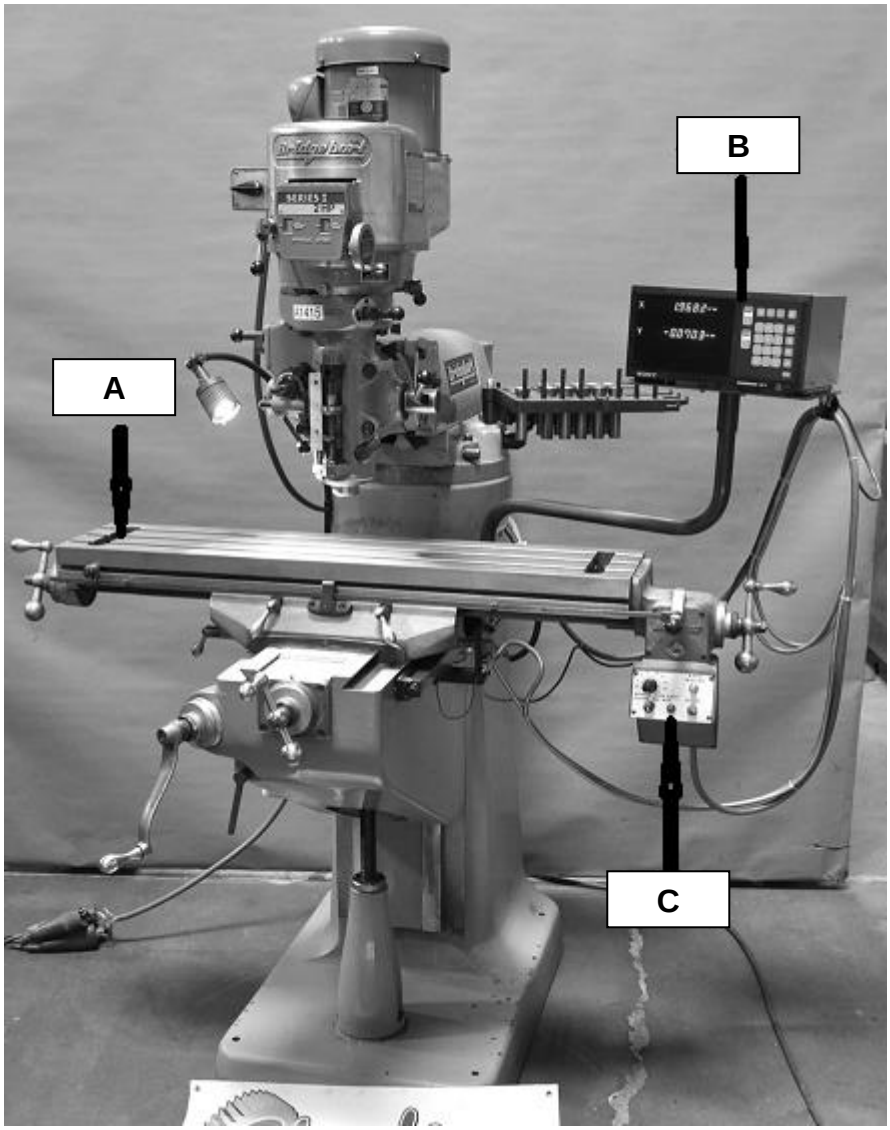

FIGURE 3

4.3.1 Identify the machine in FIGURE 3. (1)

4.3.2 Label the components by writing only the answer next to the letter (A–C) in the ANSWER BOOK. (3 × 1) (3)

[20]

QUESTION 5

5.1 A carriage is the assembly of various parts of a centre lathe that can be traversed along the lathe bed. FIGURE 4 shows some of these components.

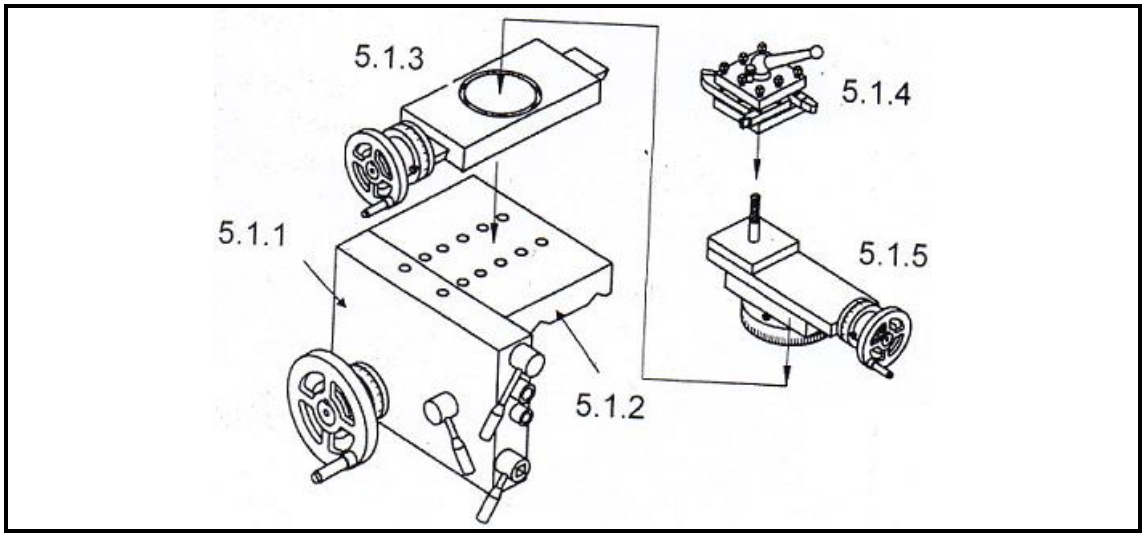

FIGURE 4

Label the components in FIGURE 4 by writing only the answer next to the question number (5.1.1–5.1.5) in the ANSWER BOOK. (5 × 1) (5)

5.2 A 15 mm diameter hole must be drilled in a piece of metal. The cutting speed is given as 600 mm per second.

Calculate the speed of the drill in revolutions per minute. (5)

5.3 A workpiece must have 13 gear teeth machined on its circumference.

5.3.1 Which type of indexing should be performed on this gear-blank? (1)

5.3.2 Calculate the required indexing using a Cincinnati dividing head as shown below. (4)

CINCINNATI DIVIDING HEAD

Side 1	24	25	28	30	34	37	38	39	41	42	43
Side 2	46	47	49	51	53	54	57	58	59	62	66

5.4 List FIVE pre-operational checks to do before operating a milling machine. (5)

5.5 Show, with the aid of freehand sketch, the difference between down-cut milling and up-cut milling and give TWO advantages of each. (4 + 4) (8)

5.6 A shaft 300 mm long must be turned in a lathe with a feed of 0,5 mm per revolution. The cutting speed for the material is 26 metres per minute and the shaft diameter is 45 mm.

Calculate the time required to take one cut over the length of the shaft. Give the answer in minutes and seconds. (7)

[35]

TOTAL: 100

Copyright reserved