higher education & training

Department:
Higher Education and Training
REPUBLIC OF SOUTH AFRICA

NATIONAL CERTIFICATE (VOCATIONAL)

MACHINE MANUFACTURING
NQF LEVEL 3

(6030203)

11 December 2020 (Y-paper)
13:00–16:00

This question paper consists of 6 pages.

561Q1N2011

Copyright reserved

TIME: 3 HOURS
MARKS: 100

INSTRUCTIONS AND INFORMATION

1. Answer all the questions.
2. Read all the questions carefully.
3. Number the answers according to the numbering system used in this question paper.
4. Keep subsections of questions together.
5. Sketches must be neat.
6. Write neatly and legibly.

Copyright reserved

QUESTION 1: MACHINE SAFETY

1.1 Name FIVE types of basic guards in a fitting and machining workshop. (5)

1.2 Give THREE reasons why machine guards are important in a workshop. (3)

1.3 Name THREE personal protective items to be worn when working on a lathe. (3)

1.4 Give TWO examples of unsafe clothing that can lead to accidents when operating machines. (2)

1.5 Why is the ON button on a machine recessed? (2)

[15]

QUESTION 2: CAD APPLICATIONS

2.1 Give TWO reasons why many workshops use CAD in manufacturing. (2)

2.2 Indicate whether each of the following is a CAD application by writing only 'Yes' or 'No' next to the question number (2.2.1–2.2.5) in the ANSWER BOOK.

2.2.1 Microsoft Word

2.2.2 Caddie

2.2.3 Paintbrush

2.2.4 AutoCAD

2.2.5 Excel

(5 × 1) (5)

2.3 Explain the importance of layers in the production of CADs. (1)

2.4 Give FIVE examples of drawings that can be produced with CAD. (5)

2.5 Give TWO disadvantages of using CAD in manufacturing. (2)

[15]

Copyright reserved

QUESTION 3: ISO FITS AND LIMITS

3.1 Differentiate between an *interference fit* and a *clearance fit*. (2)

3.2 FIGURE 1 shows a centre to be machined on a lathe.

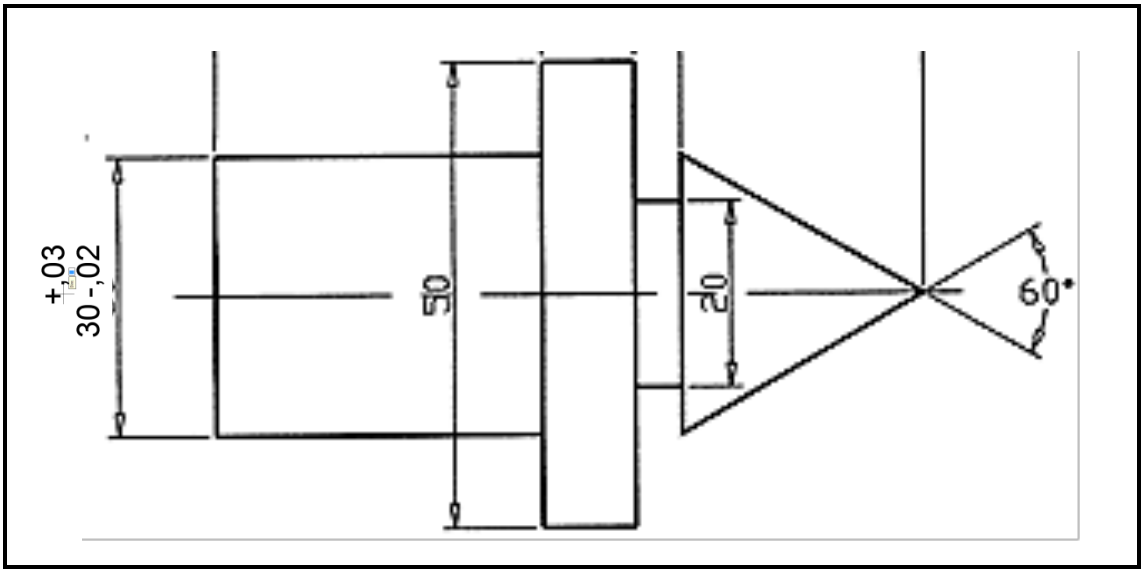

FIGURE 1

Determine:

3.2.1 The basic size of the biggest diameter (2)

3.2.2 The upper limit of the 30 diameter (1)

3.2.3 The lower limit of the 30 diameter (1)

3.2.4 The tolerance of the 30 diameter (2)

3.3 Name the TWO types of limits. (2)

3.4 50 H7–g6 is given as the running fit between a shaft and a sliding bearing.

Give the meaning of each of the following symbols represented by this fit:

3.4.1 Number 50

3.4.2 Capital letter H

3.4.3 Number 7

3.4.4 Small letter g

3.4.5 Number 6

(5 × 1) (5)
[15]

Copyright reserved

QUESTION 4: CENTRE LATHE AND MILLING MACHINE

4.1 Give TWO advantages of soluble oils over neat-cutting oils. (2)

4.2 List FIVE steps to follow during the planning stage of the machining process in terms of materials, tooling and accessories. (5)

4.3 Would a soft-grinding or hard-grinding wheel be used for sharpening an HSS tool? (1)

4.4 Differentiate, with simple sketches, between a cutting tool *above centre height* and *at the correct centre height*. (2 + 2) (4)

4.5 Name SIX types of turning that can be done on a centre lathe. (6)

4.6 Name TWO types of drilling machines in a workshop. (2)
[20]

QUESTION 5: CENTRE LATHE AND MILLING MACHINE

5.1 Give FOUR reasons why a drill bit sometimes fractures while drilling on a drilling machine or lathe. (4)

5.2 FIGURE 2 shows a taper turning method.

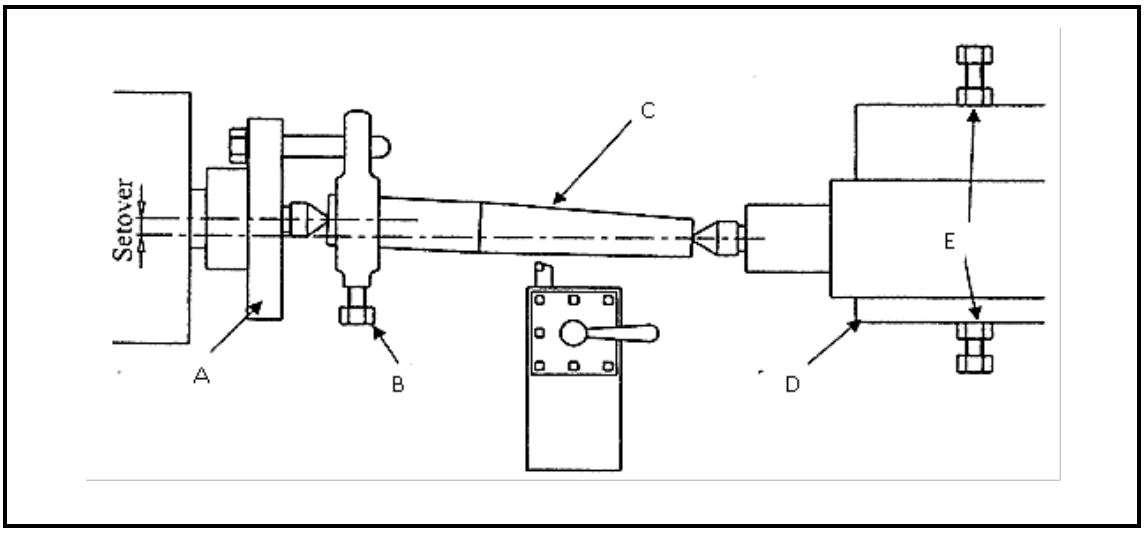

FIGURE 2

Name the parts of the taper turning method by writing only the answer next to the letter (A–E) in the ANSWER BOOK. (5 × 1) (5)

5.3 Draw simple sketches of the *upcut milling process* and the *downcut milling process*. (2 + 2) (4)

5.4 Calculate the required indexing for TWO keyways at 175° using a Brown and Sharpe dividing head with the following details:

Plate 1: 15, 16, 17, 18, 19 and 20 holes
Plate 2: 21, 23, 27, 29, 31 and 33 holes
Plate 3: 37, 39, 41, 43, 47 and 49 holes (5)

5.5 Calculate the feed, in mm/min, of a 60 mm diameter cutter with five teeth operating at a cutting speed of 60 m/min and a feed of 0,12 per tooth. (5)

5.6 FIGURE 3 shows a milling machine.

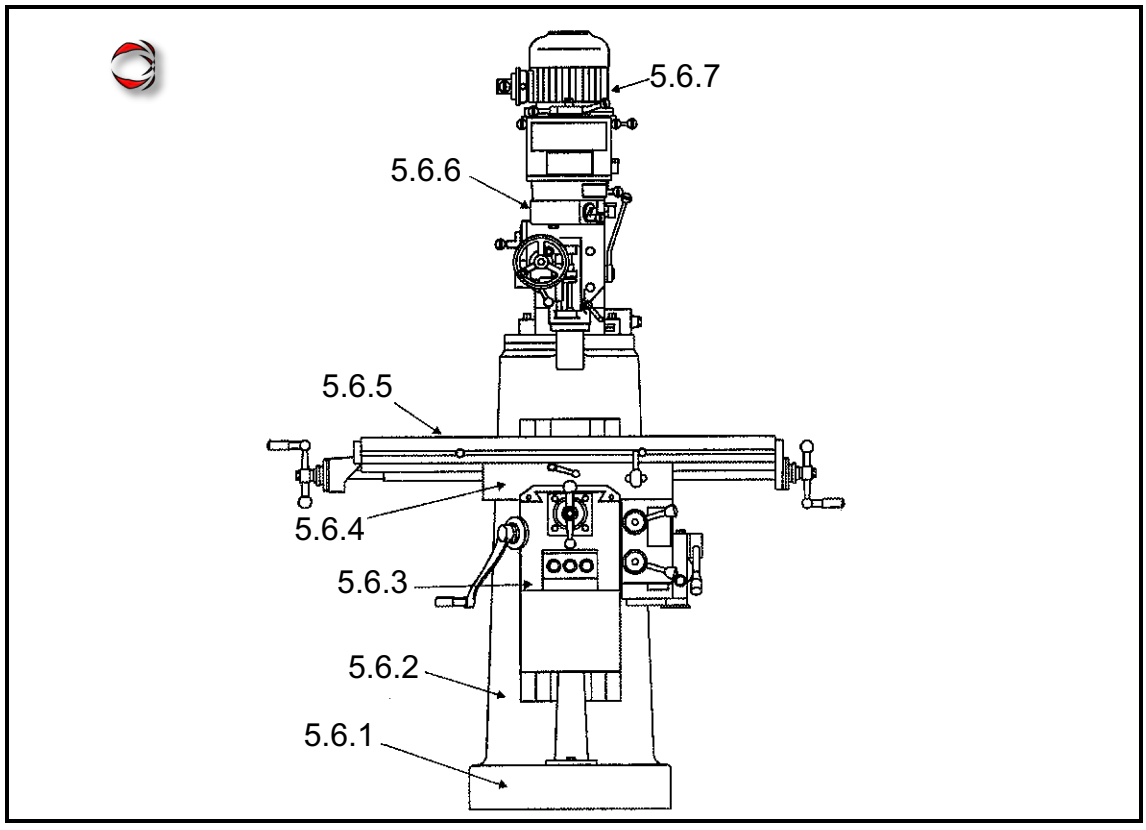

FIGURE 3

Name the components of the milling machine by writing only the answer next to the question number (5.6.1–5.6.7) in the ANSWER BOOK. (7 × 1) (7)

5.7 Name FIVE types of cutters used during horizontal milling. (5)
[35]

TOTAL: 100

Copyright reserved