higher education & training

Department:
Higher Education and Training
REPUBLIC OF SOUTH AFRICA

NATIONAL CERTIFICATE (VOCATIONAL)

FITTING AND TURNING
NQF LEVEL 2

(6011042)

22 November 2018 (X-Paper)
09:00–12:00

Calculators may be used.

This question paper consists of 6 pages.

NCV

TIME: 3 HOURS
MARKS: 100

INSTRUCTIONS AND INFORMATION

1. Answer ALL the questions.
2. Read ALL the questions carefully.
3. Number the answers according to the numbering system used in this question paper.
4. Answer each question on a NEW page.
5. Write neatly and legibly.

NCV

QUESTION 1

1.1 Indicate whether the following statements are TRUE or FALSE. Choose the answer and write only 'True' or 'False' next to the question number (1.1.1–1.1.5) in the ANSWER BOOK.

1.1.1 Good housekeeping means keeping the work area neat, tidy and free from hazards.

1.1.2 The Occupational Health and Safety Act makes provision for the health and safety of all persons at work.

1.1.3 Eye protection must be used when dressing a grinding wheel.

1.1.4 Machines must be cleaned during use.

1.1.5 The work rest on a grinding machine must be adjusted within 3 mm.

(5 × 1) (5)

1.2 FIGURE 1 below shows a bench grinding machine. Label items (A–E) in the ANSWER BOOK.

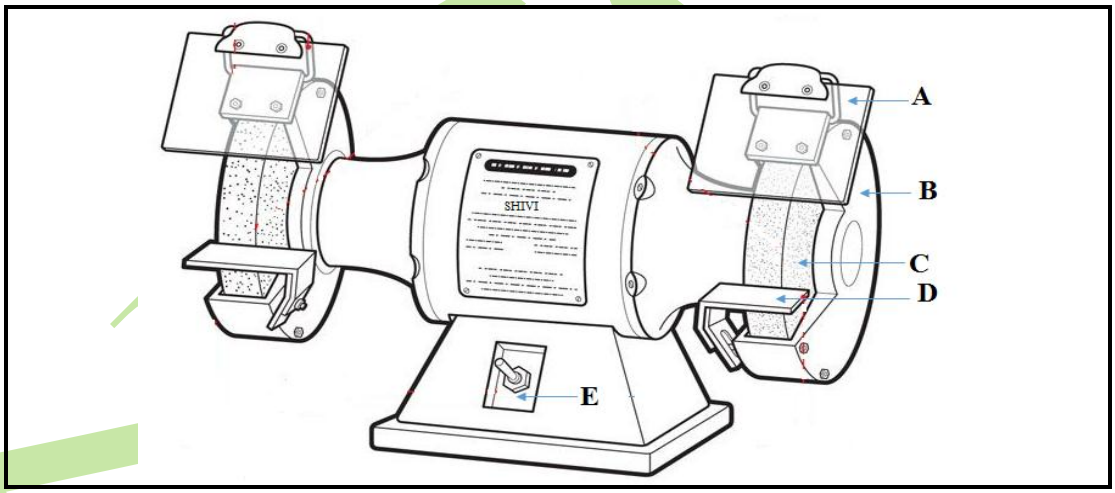

FIGURE 1 (5)

1.3 A grinding wheel has a diameter of 250 mm and a turning speed of 1675 m/min.

Calculate the rotational speed of the grinding wheel in RPM. (5)

1.4 Draw a neat labelled diagram of a screw thread.
Show the following labels:
The flank, pitch, root diameter, crest and crest diameter. (6)

1.5 Reamers are used to shape and enlarge drilled holes.

Name FOUR types of commonly used reamers. (4)

[25]

Copyright reserved

QUESTION 2

2.1 FIGURE 2 below shows a radial arm drilling machine. Label items (A–F) in the ANSWER BOOK.

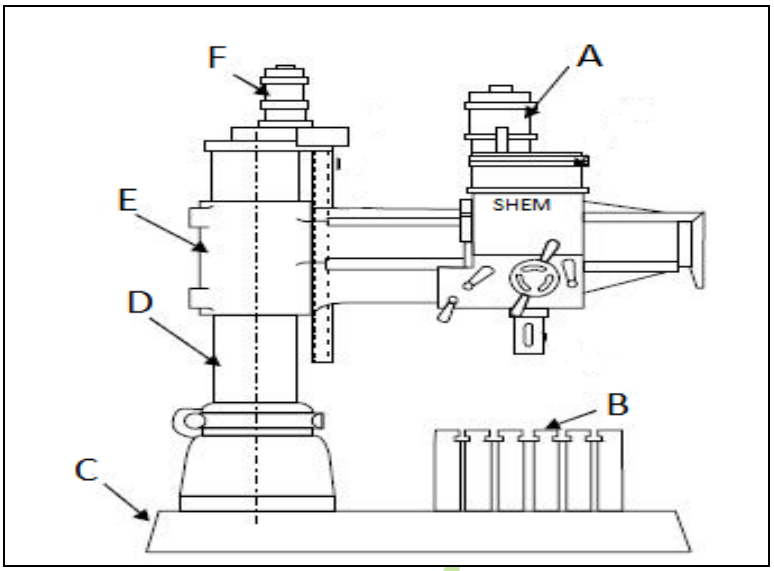

FIGURE 2 (6)

2.2 V-blocks are used to position and hold circular work pieces.

Draw a neat labelled diagram of a V-block clamping method. Show the following labels: Clamp, circular work piece, V-block and T-bolt. (6)

2.3 List THREE pre-checks that need to be carried out on a pillar type drilling machine before any drilling operation can be performed. (3)

2.4 Choose a word from COLUMN B that matches the description in COLUMN A. Write only the letter (A–G) next to the question number (2.4.1–2.4.4) in the ANSWER BOOK.

COLUMN A		COLUMN B	
2.4.1	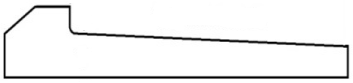	A	taper key
		B	tensile key
2.4.2	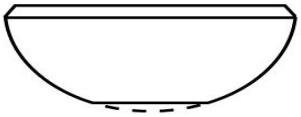	C	tangent key
		D	woodworth key
2.4.3	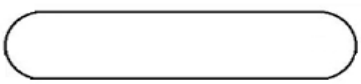	E	gib head key
		F	rounded end key
2.4.4	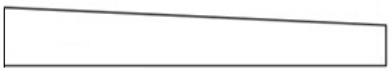	G	woodruff key

(4 × 1) (4)

Copyright reserved

2.5 State the difference between *machine bolts* and *black bolts*. (4)

2.6 Give TWO purposes of a flat washer. (2)
[25]

QUESTION 3

3.1 List FIVE turning operations that can be performed on a centre lathe. (5)

3.2 Explain how the height of a cutting tool must be correctly set up on a centre lathe. (5)

Hint: The tail stock is used.

3.3 FIGURE 3 below shows a Tailstock that is used on a centre lathe. Label items (A–F) in the ANSWER BOOK.

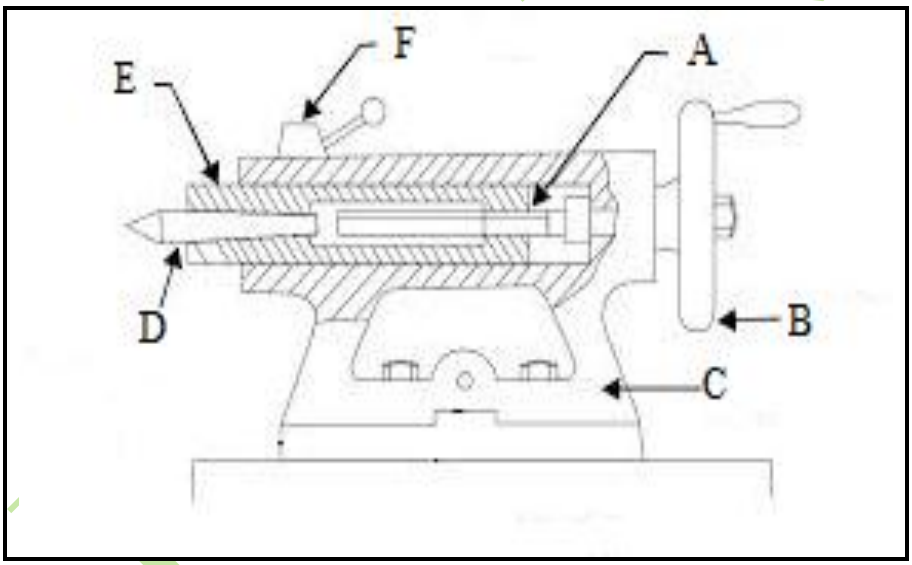

FIGURE 3 (6)

3.4 Explain the purpose of using a lathe steady. (5)

3.5 List FOUR advantages of a three jaw chuck. (4)
[25]

QUESTION 4

4.1 List FIVE items of personal protective equipment (PPE) that an operator must use while working on a milling machine (5)

4.2 Complete the following paragraph by using the word(s) in the list below. Write only the word(s) next to the question number (4.2.1–4.2.5) in the ANSWER BOOK.

Knee; column; saddle; overarm; table trips

The (4.2.1) provides support and correct alignment for the arbor. The (4.2.2) fits to the column and can be moved vertically up or down. The (4.2.3) automatically trips the table at pre-set positions. The (4.2.4) fits on top of the knee. The base is at the bottom of the machine and supports the (4.2.5). (5)

4.3 FIGURE 4 below shows different types of cutting tools used for milling.
Name the cutting tools (A–E) in the ANSWER BOOK.

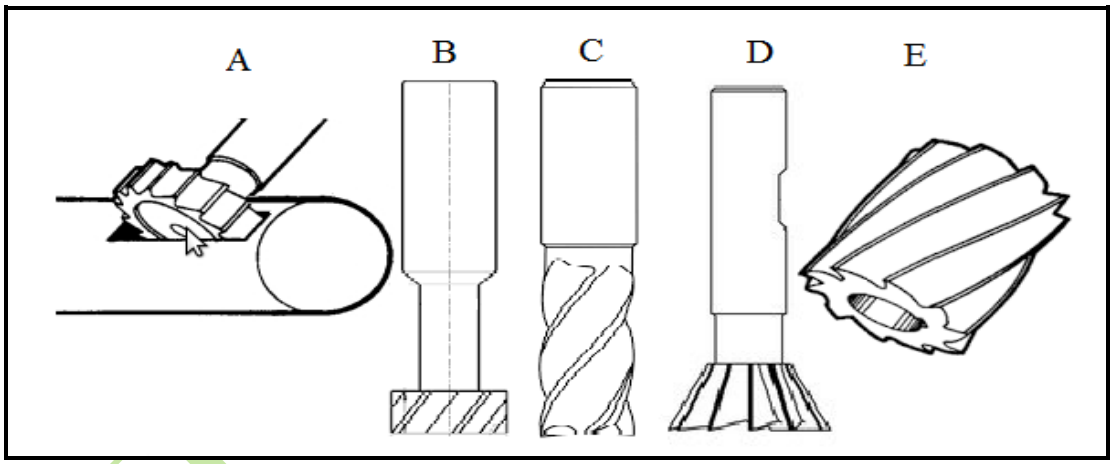

FIGURE 4 (5)

4.4 An engineering drawing indicates the dimensions to manufacture a work piece.

Explain the working tolerance of 10, 00 ±0,02 mm. (5)

4.5 Explain how a machine vice is aligned up on a milling machine. (5)
[25]

TOTAL: 100

Copyright reserved