higher education & training

Department:
Higher Education and Training
REPUBLIC OF SOUTH AFRICA

# NATIONAL CERTIFICATE (VOCATIONAL)

# ENGINEERING GRAPHICS AND TECHNOLOGY
## NQF LEVEL 2

(12050682)

**18 November 2019 (X-Paper)**
**09:00–13:00**

**This question paper consists of 7 pages and 2 answer sheets.**

Copyright reserved

**TIME: 4 HOURS**
**MARKS: 100**

## INSTRUCTIONS AND INFORMATION

1. Answer ALL the questions.
2. Read ALL the questions carefully.
3. Number the answers according to the numbering system used in this question paper.
4. Answer each question on a separate A4 DRAWING SHEET.
5. Use only ONE side of the DRAWING SHEET to plot or print an answer.
6. Insert candidate examination number on the top of each A4 DRAWING SHEET next to the QUESTION NUMBER.
7. The QUESTION NUMBER must appear at the top centre of each DRAWING SHEET.
8. Candidates must plot or print their own drawings.
9. A balanced layout is very important, and candidates will be penalised for poor planning.
10. Insert the ANSWER SHEETS and ALL loose DRAWING SHEETS in the cover folder BOE8/15.
11. Work neatly.

Copyright reserved 

## QUESTION 1

1.1 Name the TWO set squares used for engineering drawings. (2)

1.2 Give the term for the abbreviation UCUT. (1)

Print your answer in CAPITAL LETTERS, 5 mm high. (2)
**[5]**

## QUESTION 2

FIGURE 1 shows the front view of a casting. Make a freehand drawing of the given view, approximately full size.

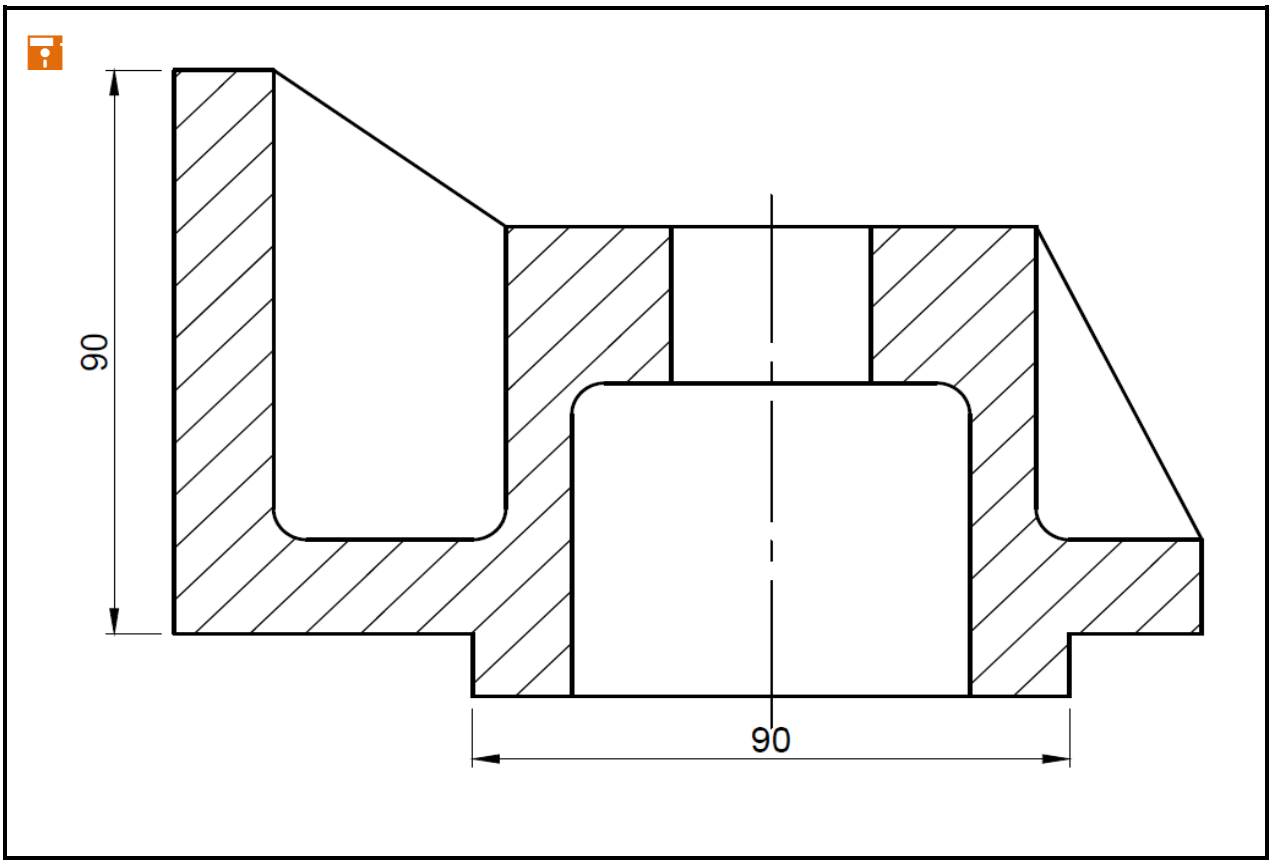


**FIGURE 1** **[15]**

## QUESTION 3

FIGURE 2 shows the front view of a machine component. Draw, to scale 1:1, the given front view of the machine component.

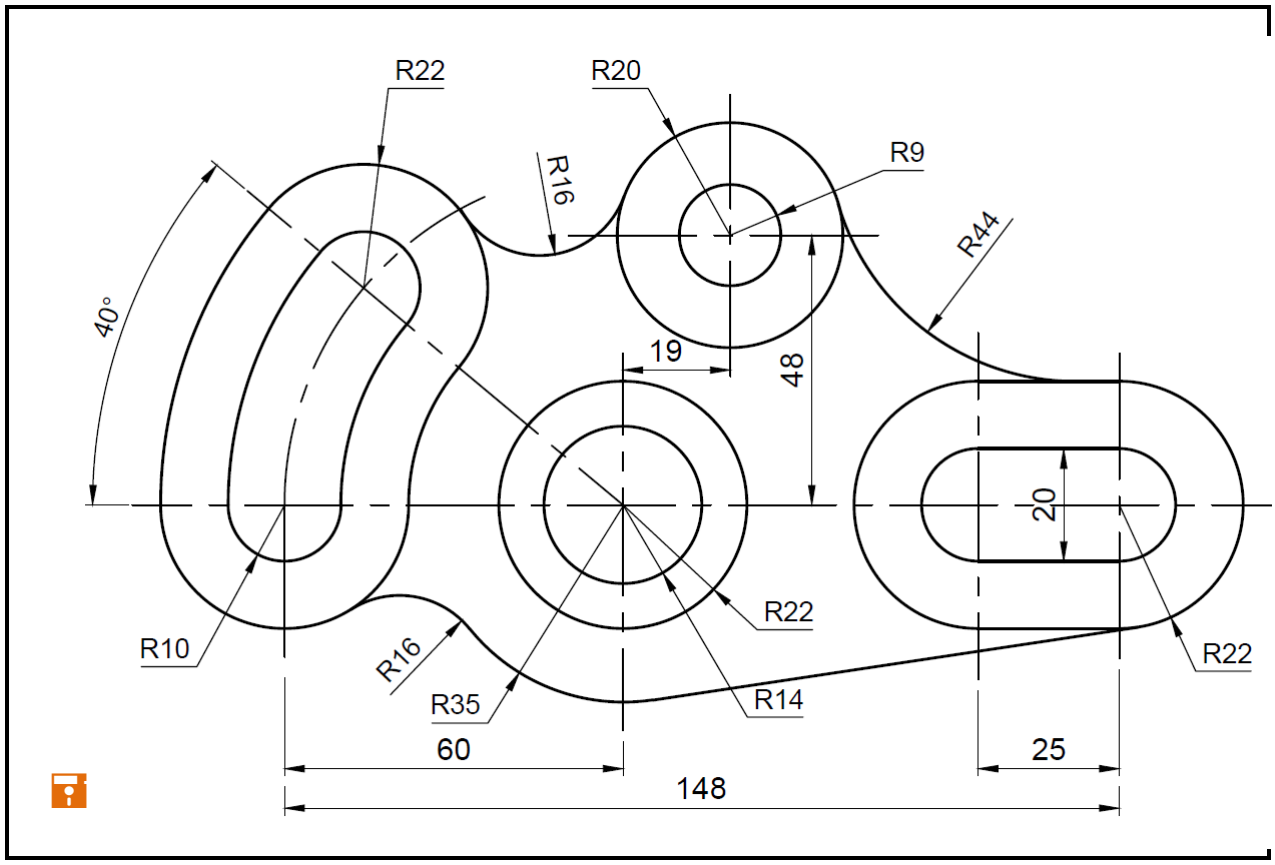


**FIGURE 2** **[20]**

Copyright reserved 

**QUESTION 4**

FIGURE 3 shows a circular disc with a diameter of 50 mm. The disc rolls along the horizontal surface in the clockwise direction.

Construct the locus of point P if the disc rolls without slipping for one full revolution.

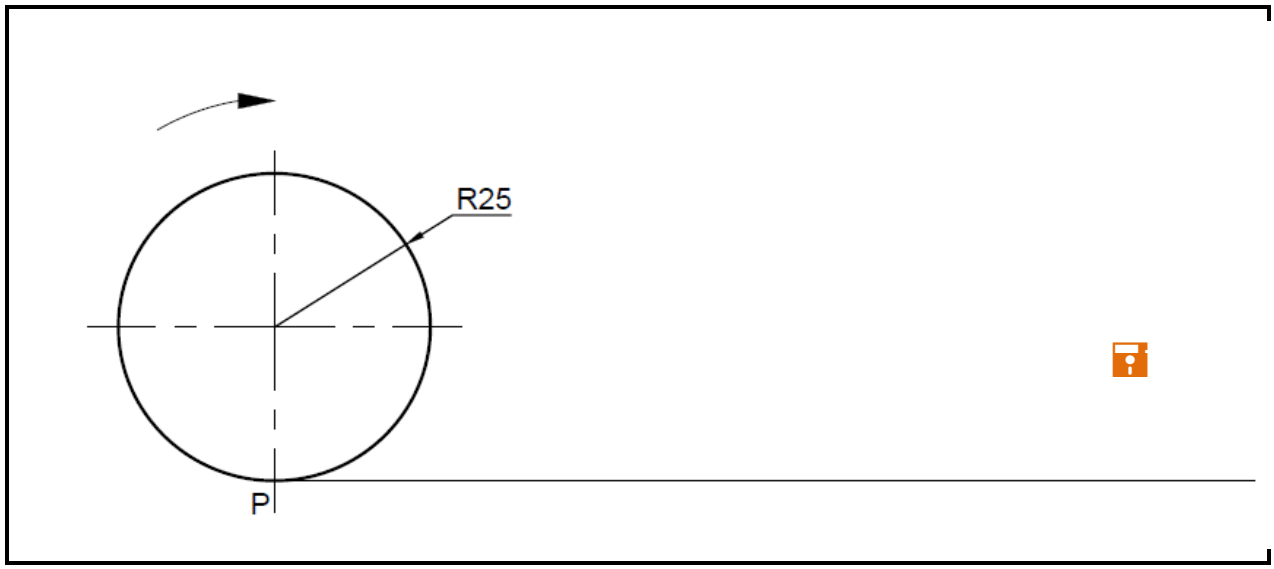


**FIGURE 3** **[15]**

## QUESTION 5

FIGURE 4 shows an isometric view of a machine block. Draw, to scale 1:1 and in first-angle orthographic projection, the following views.

Show ALL hidden detail.

5.1 A front view (8)

5.2 A top view (9)

5.3 A left view (8)

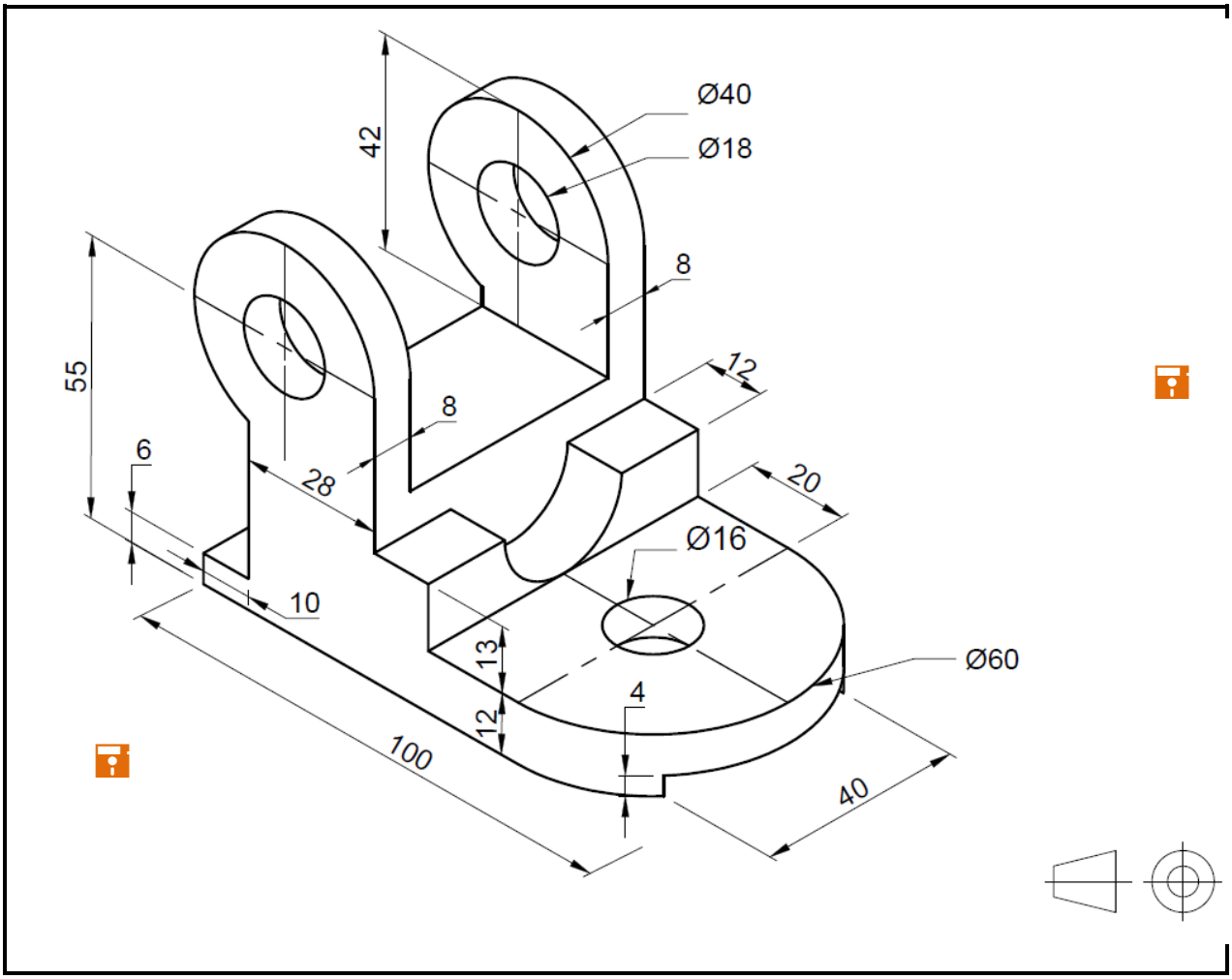


**FIGURE 4** **[25]**

Copyright reserved 

## QUESTION 6

FIGURE 5 shows the front and top views of a machine block. Draw, to scale 1:1, a perspective drawing in one-point perspective of the machine block. The distance of the eye in front of the picture plane is 120 mm and the height of the eye above the ground is 100 mm. Point A is situated on the ground, up against the picture plane and in line with the centre of vision.

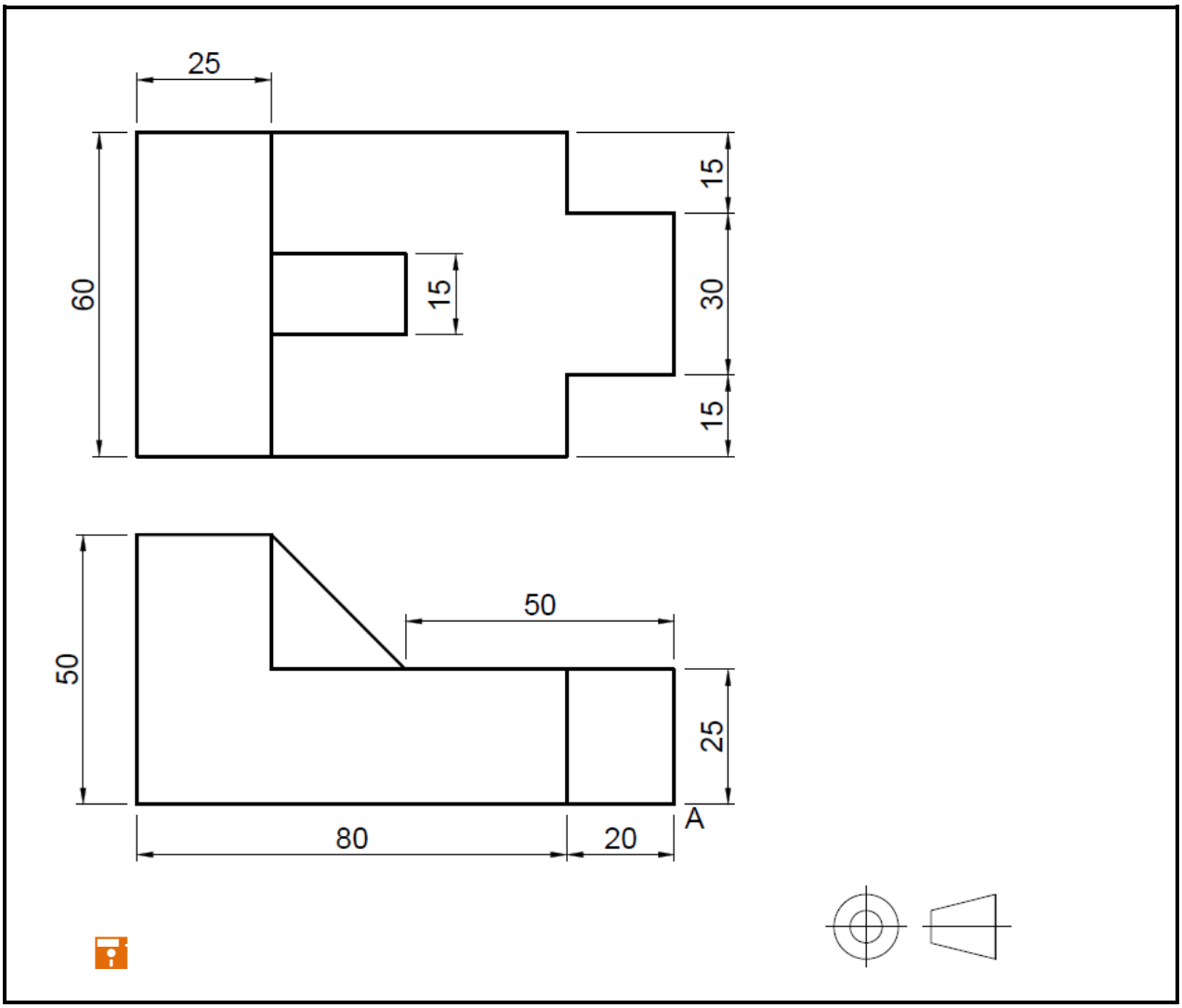


**FIGURE 5** **[25]**

**TOTAL: 100**

Copyright reserved

**ANSWER SHEET EXAMINATION NUMBER:** | | | | | | | | | | | | | |

**QUESTION 1**

Copyright reserved 

**ANSWER SHEET EXAMINATION NUMBER:** | | | | | | | | | | | | | |

**QUESTION 2**

Copyright reserved