higher education & training

Department:
Higher Education and Training
REPUBLIC OF SOUTH AFRICA

# NATIONAL CERTIFICATE (VOCATIONAL)

## ENGINEERING GRAPHICS AND TECHNOLOGY
## NQF LEVEL 2

(12050682)

**8 November 2018 (X-Paper)**
**09:00–13:00**

**REQUIREMENTS: ONE A2 drawing sheet**

**Drawing instruments may be used.**

**This question paper consists of 7 pages.**

NCV

**TIME: 4 HOURS**
**MARKS: 100**

---

**INSTRUCTIONS AND INFORMATION**

1. Answer ALL the questions.
2. Read ALL the questions carefully.
3. Number the answers according to the numbering system used in this question paper.
4. Use both sides of the DRAWING SHEET.
5. Draw a 15 mm border on both sides of the DRAWING SHEET.
6. Do ALL drawing work, including candidate information, in pencil.
7. A radius curve stencil may be used to draw smaller arcs.
8. Unspecified radii must be R3.
9. ALL drawing work must conform to the latest SANS 10111 Code of Practice for Engineering Drawing.
10. A balanced layout is very important and candidates will be penalised for poor planning.
12. Write neatly and legibly.

---

Copyright reserved 

## QUESTION 1

1.1 State the purpose of drawing conventions used in engineering drawings. (2)

1.2 Explain the use of leader lines in engineering drawings. (1)

1.3 Print answers in capital letters 5 mm high. (2)

**[5]**

## QUESTION 2

FIGURE 1 shows the front view of a casting.

Make a freehand drawing of the given view approximately full size.

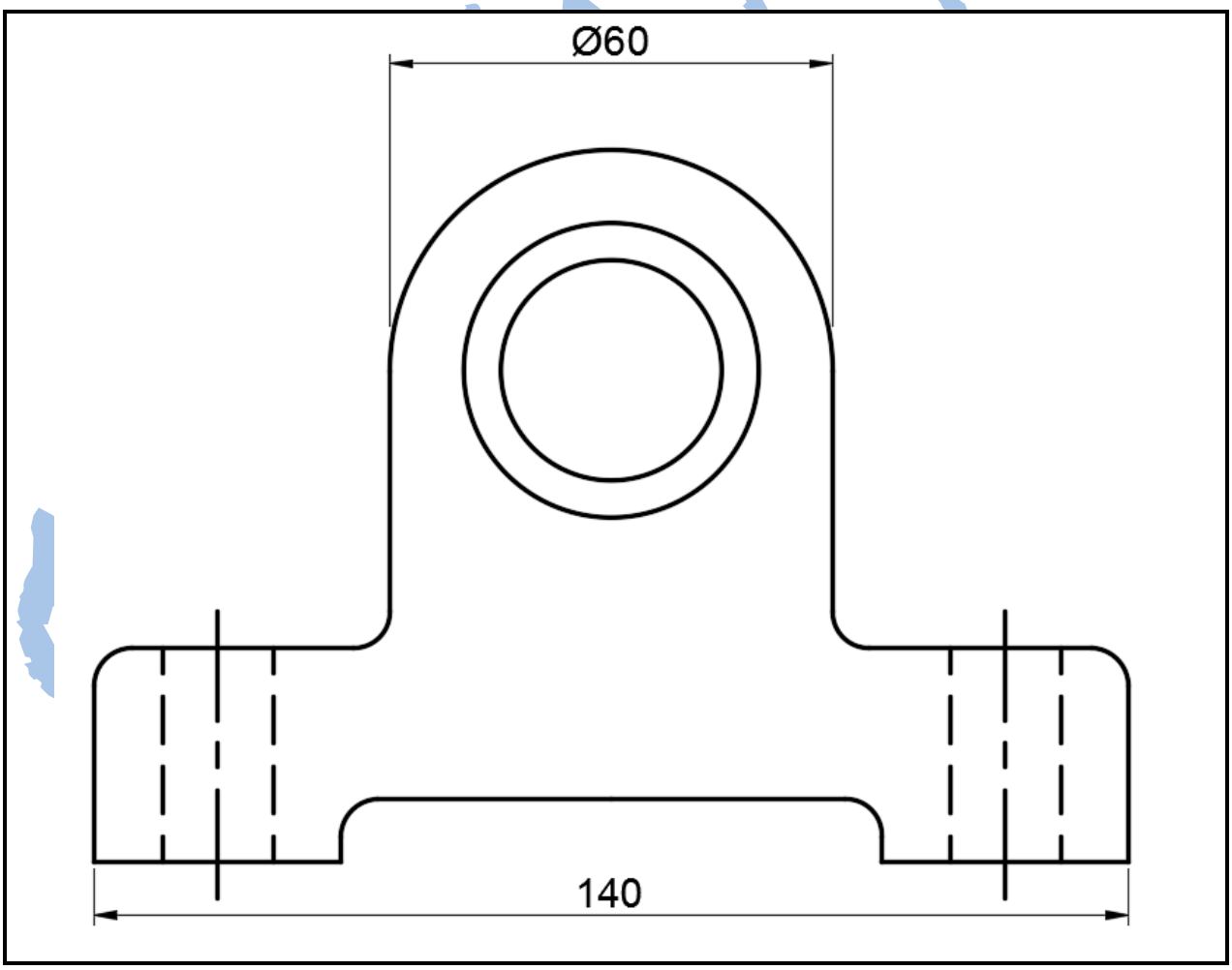


**FIGURE 1** **[15]**

**QUESTION 3**

FIGURE 2 shows the front view of a machine bracket.

Draw, to scale 1:2, the given front view of the machine bracket. Show ALL geometrical construction lines.

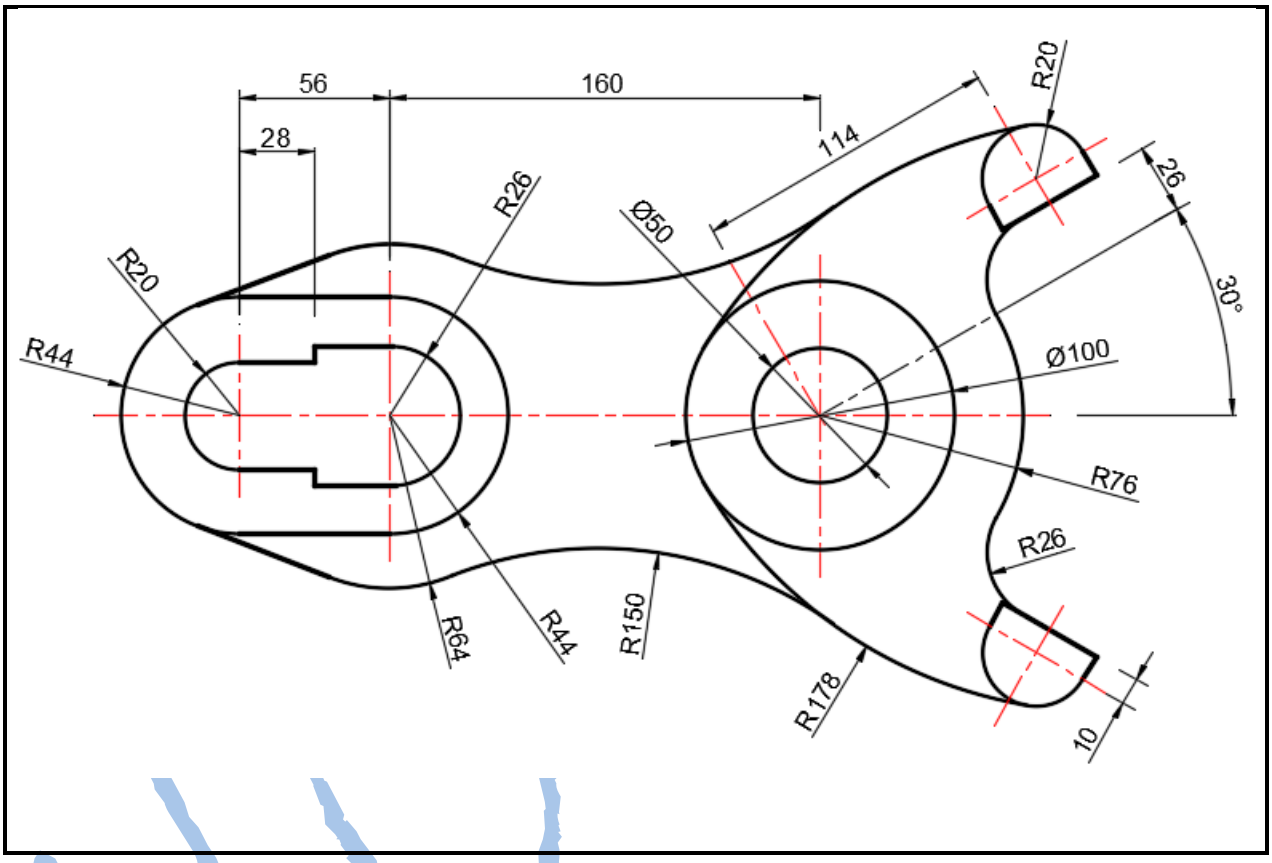


**FIGURE 2** **[20]**

**QUESTION 4**

FIGURE 3 shows the front and top views of a cylindrical tube.

Construct a right-handed helix with a pitch of 50 mm showing one-and-a-half full turns of point P. Point P is the starting point of the helix. Show ALL geometrical construction lines and numbering.

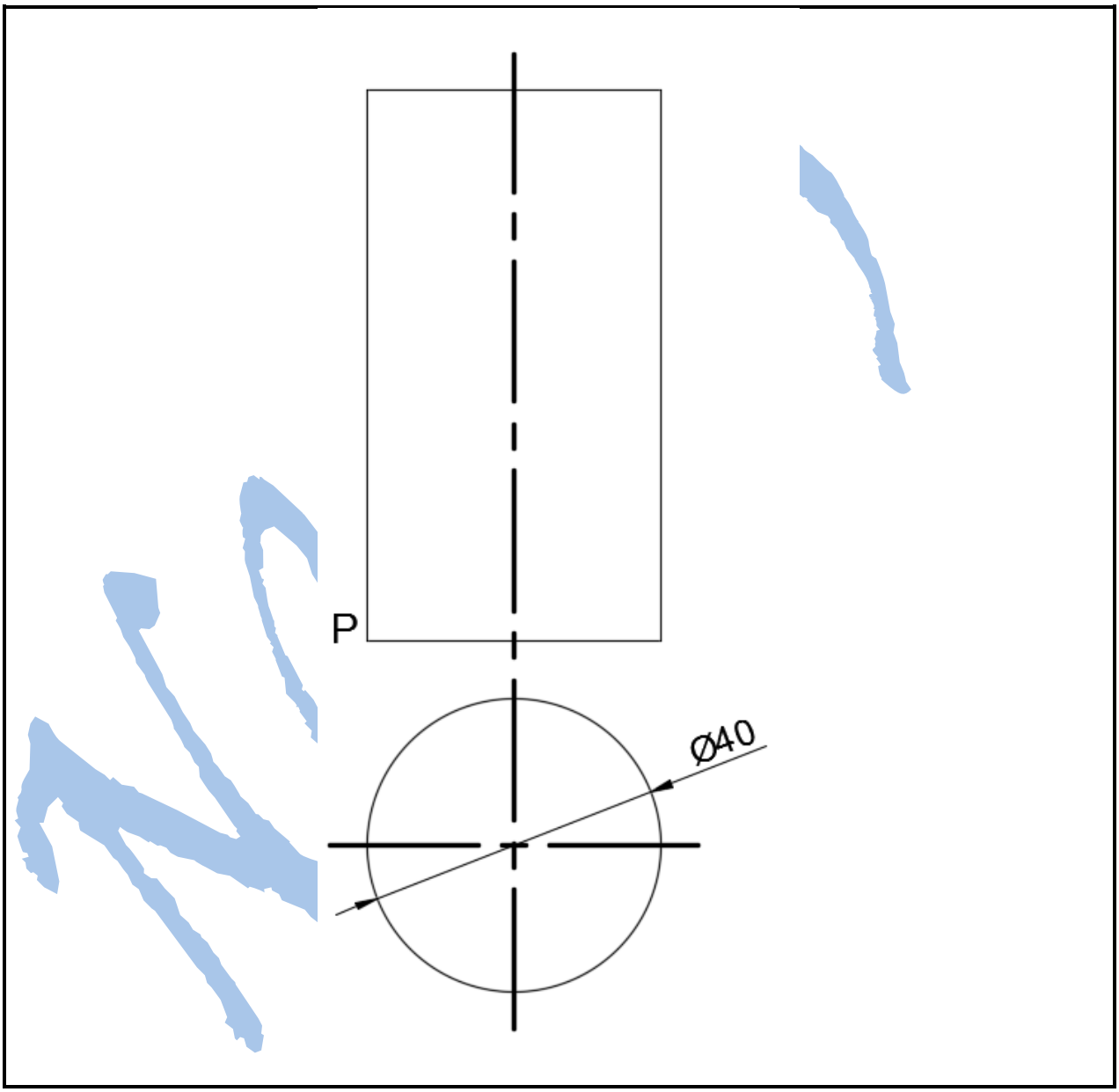


**FIGURE 3** **[15]**

**QUESTION 5**

5.1 FIGURE 4 shows an isometric view of a machine block.

Draw, to scale 1:1, the following views in first-angle orthographic projection:

5.1.1 A front view (8)

5.1.2 A left view (8)

5.1.3 A top view (9)

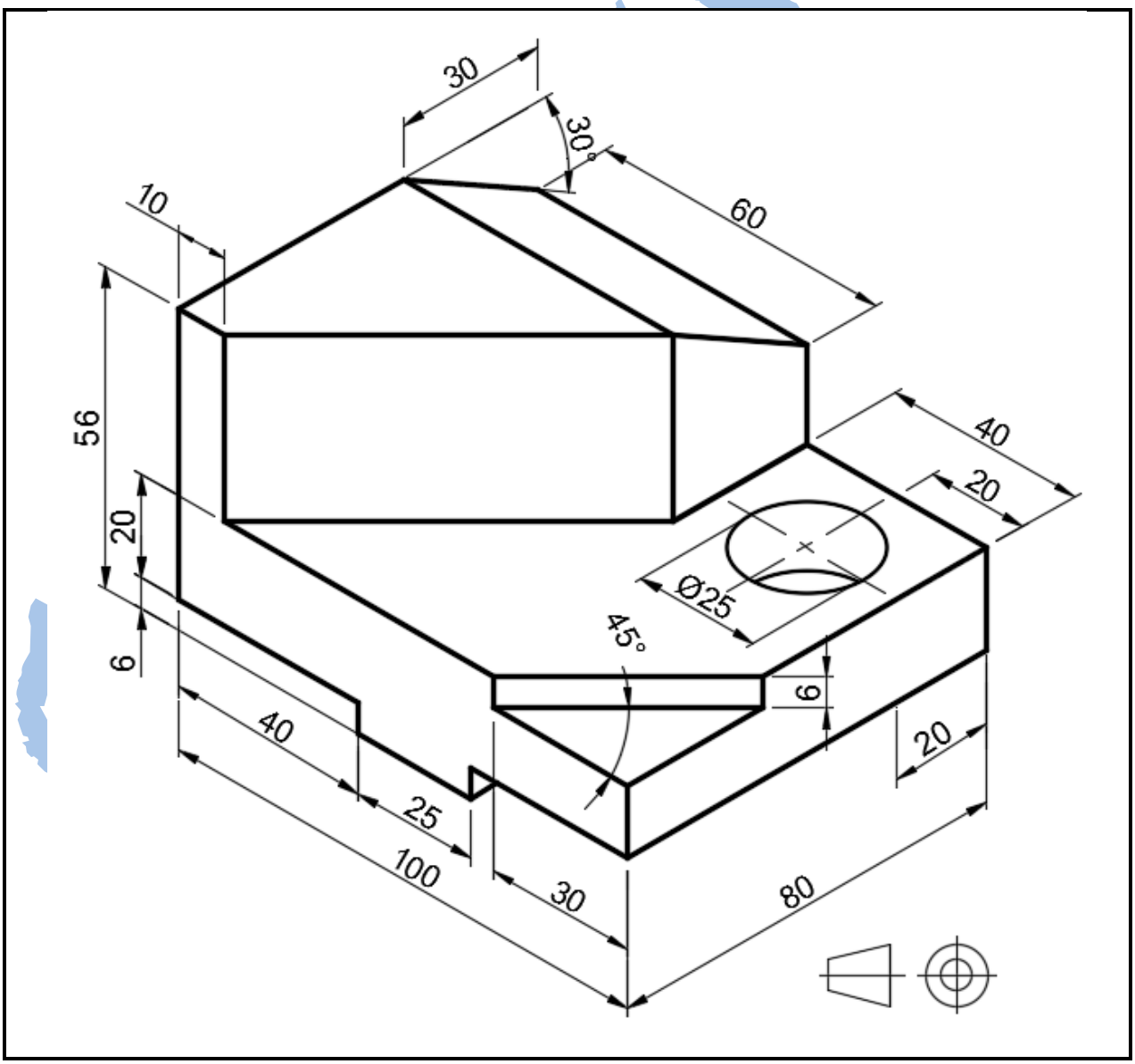


**FIGURE 4** **[25]**

**QUESTION 6**

FIGURE 5 shows two views of a V-block.

Draw, to scale 1:1, an oblique projection of the V-block.

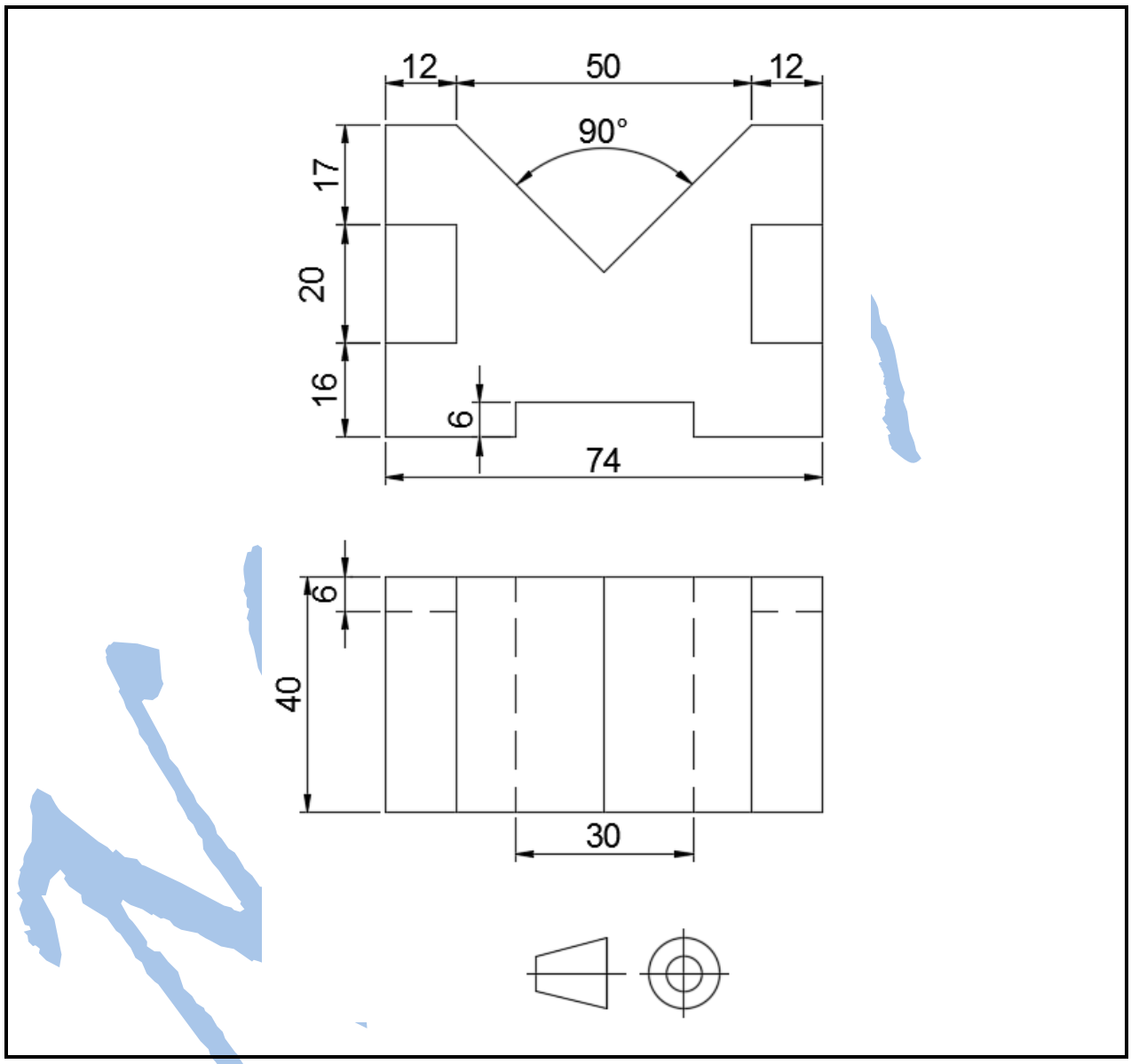


**FIGURE 5** **[20]**

**TOTAL: 100**

Copyright reserved