higher education & training

Department:
Higher Education and Training
REPUBLIC OF SOUTH AFRICA

NATIONAL CERTIFICATE (VOCATIONAL)

ENGINEERING GRAPHICS AND TECHNOLOGY
NQF LEVEL 2

(12050682)

27 February 2020 (Y-paper)
13:00–17:00

REQUIREMENTS: **A4 drawing sheets**
Cover folder (BOE 8/15)

This question paper consists of 6 pages and 2 answer sheets.

105Q1S2027

Copyright reserved

TIME: 4 HOURS
MARKS: 100

INSTRUCTIONS AND INFORMATION

1. Answer all the questions.
2. Read all the questions carefully.
3. Number the answers according to the numbering system used in this question paper.
4. Plot each drawing on ONE side of a separate A4 drawing sheet.
5. Insert the question number centred at the top of each drawing sheet.
6. Insert your examination number on the top of each drawing sheet next to the centred question number.
7. Plot or print your own drawings.
8. A balanced layout is very important and candidates will be penalised for poor planning.
9. Insert the answer sheets and all loose drawing sheets in the cover folder BOE 8/15.
10. Work neatly.

Copyright reserved

QUESTION 1

1.1 Name the TWO methods used for oblique projection construction. (2)

1.2 Give the abbreviation of tolerance. (1)

Print the answers 5 mm high in capital letters on ANSWER SHEET A (attached). (2)
[5]

QUESTION 2

FIGURE 1 shows the front view of a jenny calliper.

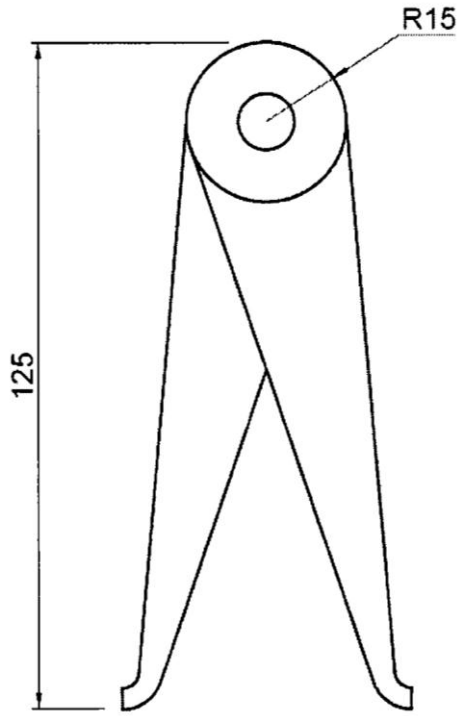

FIGURE 1

Make a freehand drawing of the given view approximately full sized on ANSWER SHEET B (attached). **[15]**

QUESTION 3

FIGURE 2 shows the front view of a machine component.

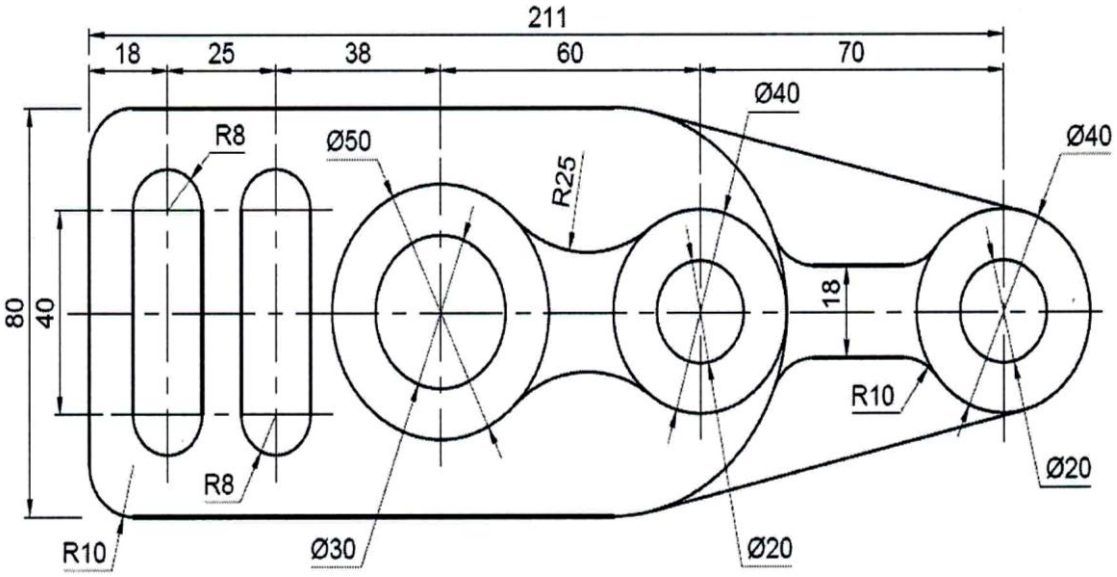

FIGURE 2

Draw, to scale 1:1, the given front view of the machine component. **[20]**

QUESTION 4

FIGURE 3 shows a circle with a 28 mm diameter rolling on the circumference of another circle with an 84 mm diameter in a clockwise direction and outside it.

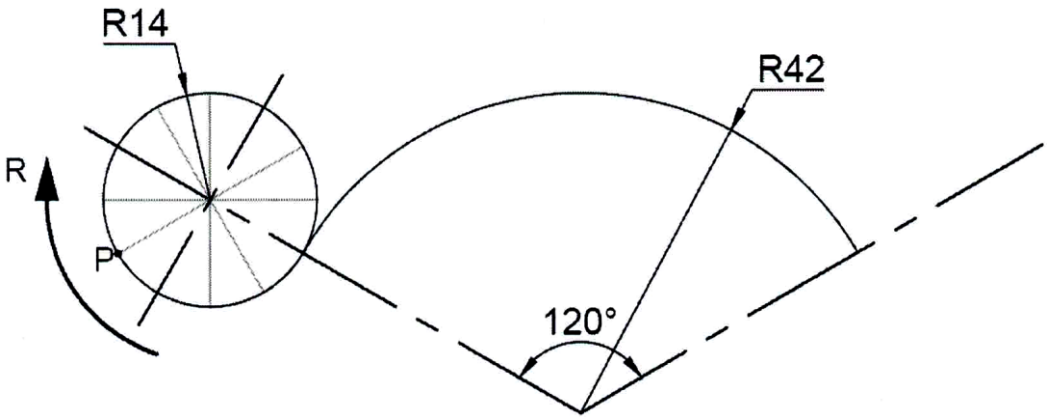

FIGURE 3

Trace the locus of point P on the circumference of the rolling circle for ONE complete revolution. **[15]**

QUESTION 5

FIGURE 4 shows a hexagonal pyramid resting on a cylinder which lies 45° to the horizontal.

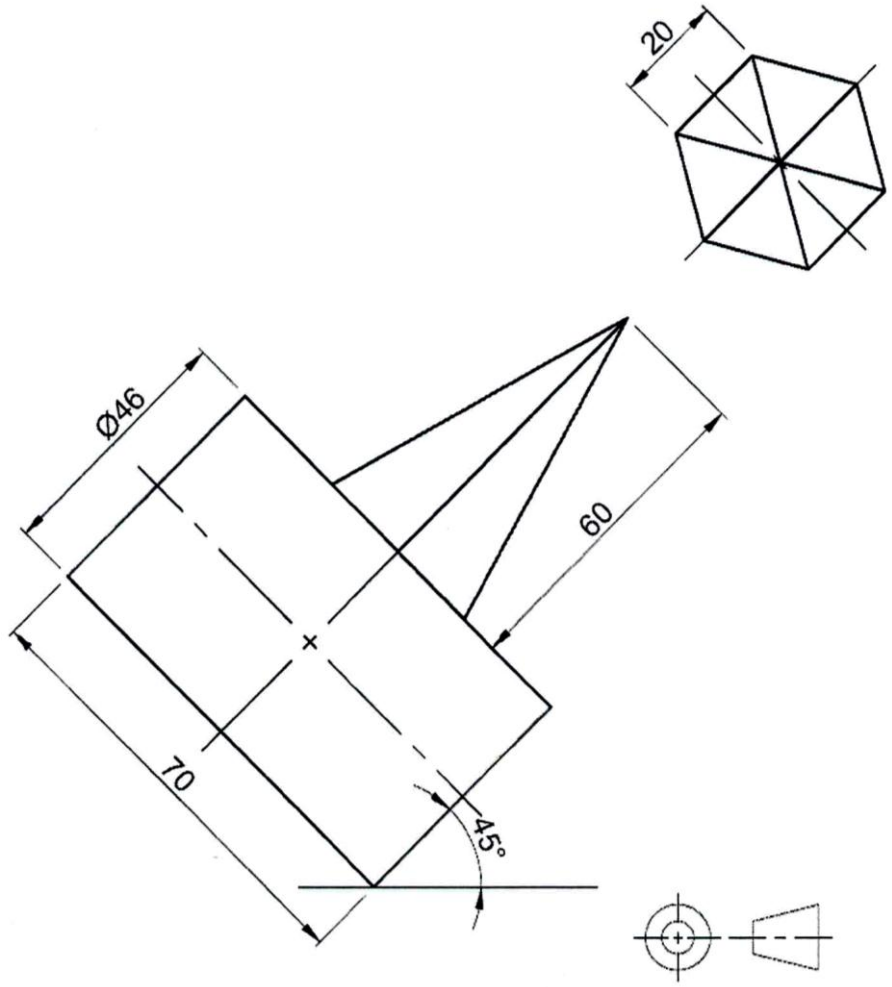

FIGURE 4

Draw, to scale 1:1, the following views in third-angle orthographic projection showing all hidden detail:

5.1 A front view (7)

5.2 A top view (9)

5.3 A right view (9)

[25]

QUESTION 6

FIGURE 5 shows the front and top views of a model.

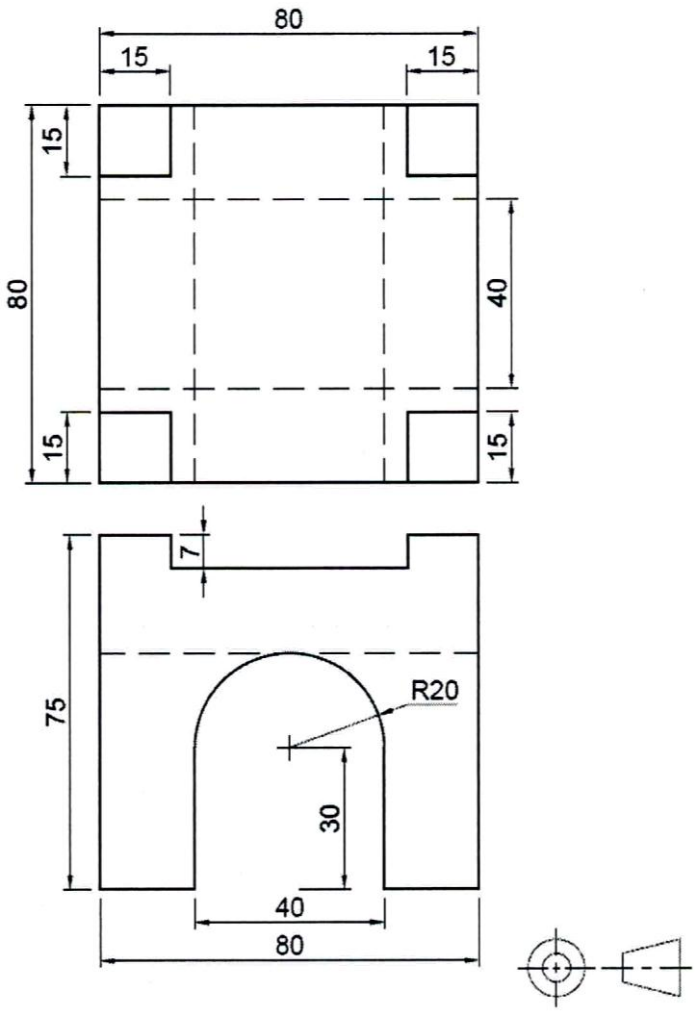

FIGURE 5

Draw, to scale 1:1 an oblique projection of the model using the cabinet method. **[20]**

TOTAL: 100

Copyright reserved

ANSWER SHEET A **EXAMINATION NUMBER:**

QUESTION 1

Copyright reserved

ANSWER SHEET B **EXAMINATION NUMBER:**

QUESTION 2

Copyright reserved