higher education & training

Department:
Higher Education and Training
REPUBLIC OF SOUTH AFRICA

MARKING GUIDELINE

NATIONAL CERTIFICATE (VOCATIONAL)

ENGINEERING GRAPHICS AND TECHNOLOGY
NQF LEVEL 2

XX February 2020

This marking guideline consists of 6 pages.

Copyright reserved

QUESTION 1

1.1
- BLOCK/BOX METHOD
- FRAME METHOD (2)

1.2 TOL (1)

Printed the answers 5 mm high in capital letters. (2)
[5]

QUESTION 2

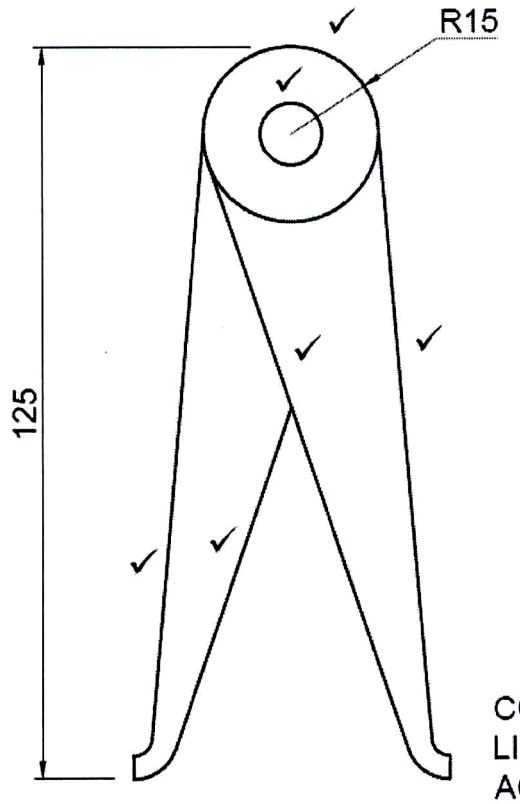

MARK ALLOCATIONS	
CORRECTNESS	6
LINEWORK	4
ACCURACY & PROPORTION	3
LAYOUT & NEATNESS	2

[15]

QUESTION 3

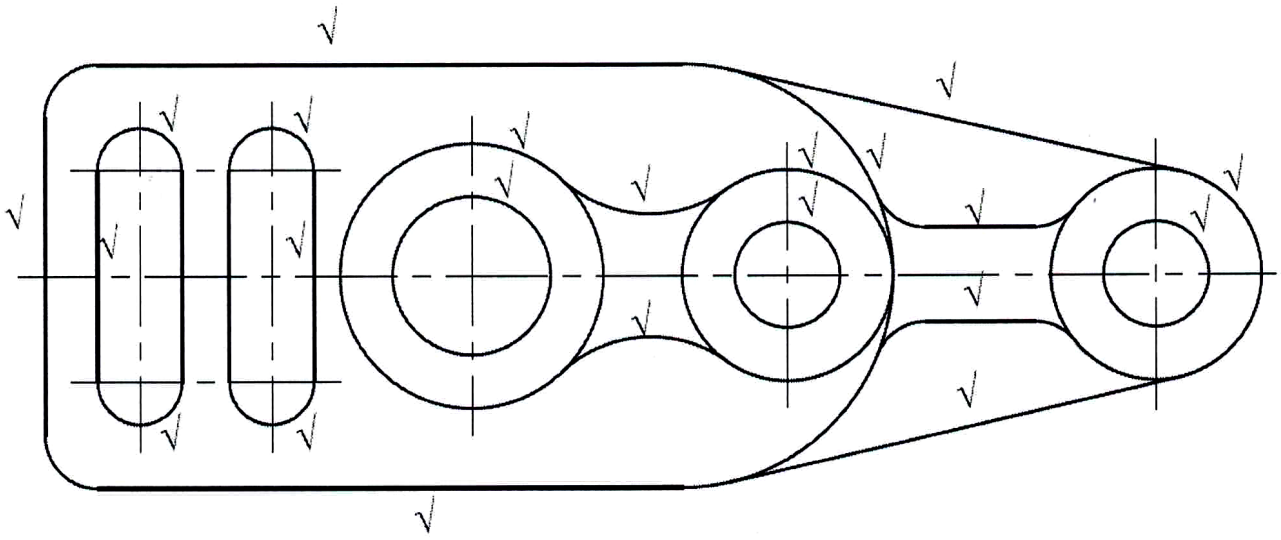

√ = ½ MARK

MARK ALLOCATIONS	
CORRECTNESS	11
LINEWORK	4
ACCURACY	3
LAYOUT & NEATNESS	2

[20]

QUESTION 4

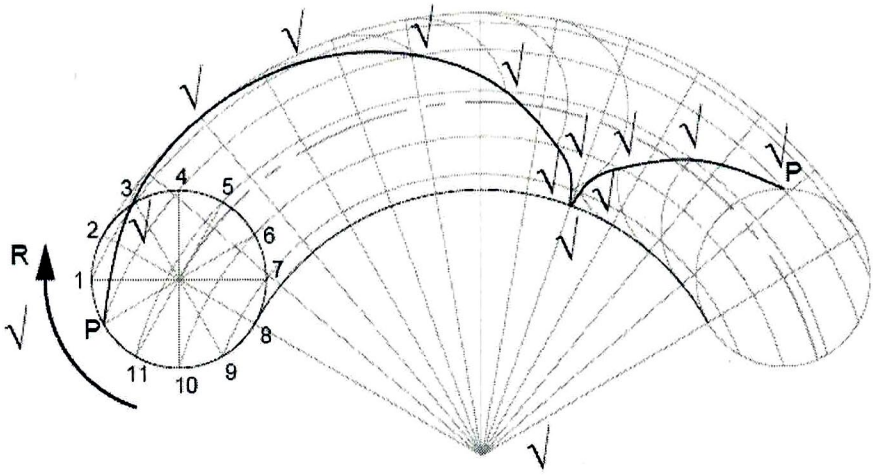

√ = ½ MARK

MARK ALLOCATIONS	
CORRECTNESS	7
LINEWORK	3
ACCURACY	3
LAYOUT & NEATNESS	2

[15]

QUESTION 5

MARK ALLOCATIONS	
CORRECTNESS	
FV	3
RV	4.5
TV	4.5
AUXILLARY VIEW	1
LINE WORK	6
ACCURACY	3
LAYOUT & NEATNESS	3
TOTAL	25

✓ = 1 MARK

√ = ½ MARK

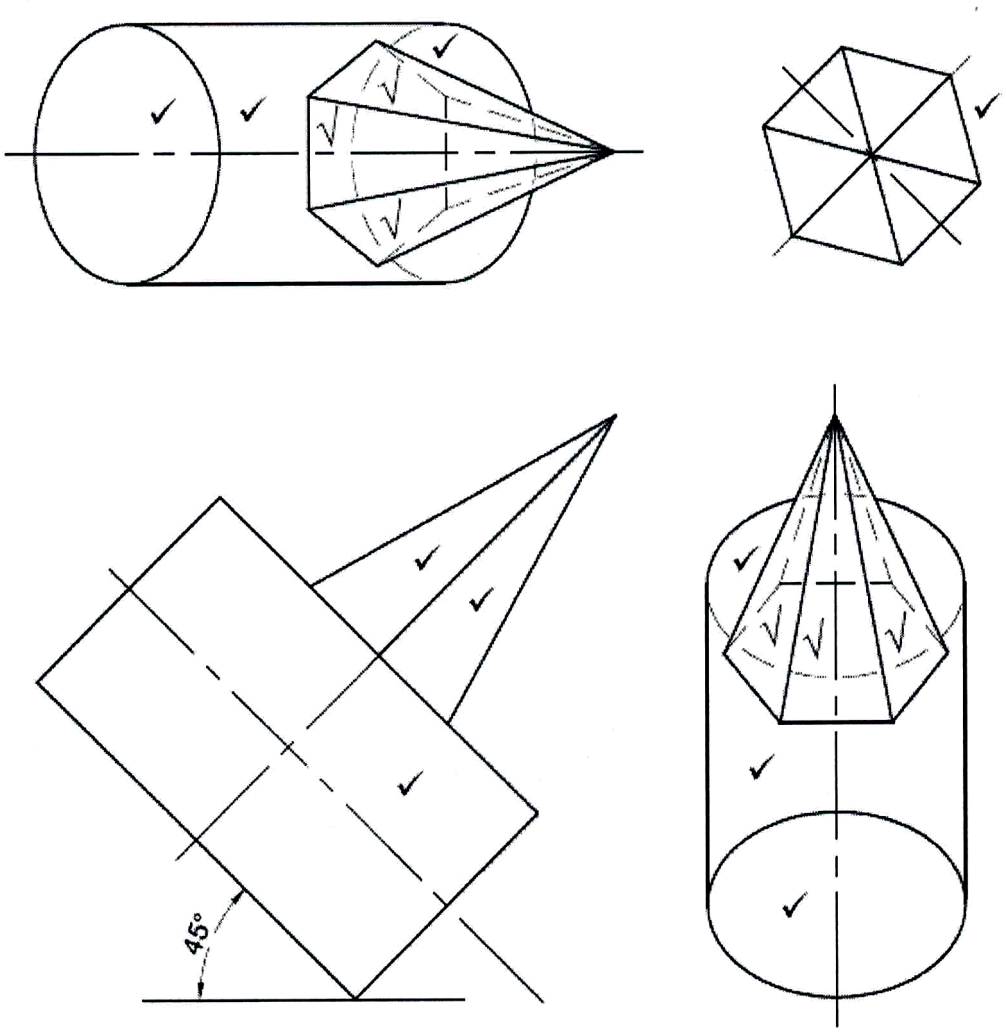

[25]

QUESTION 6

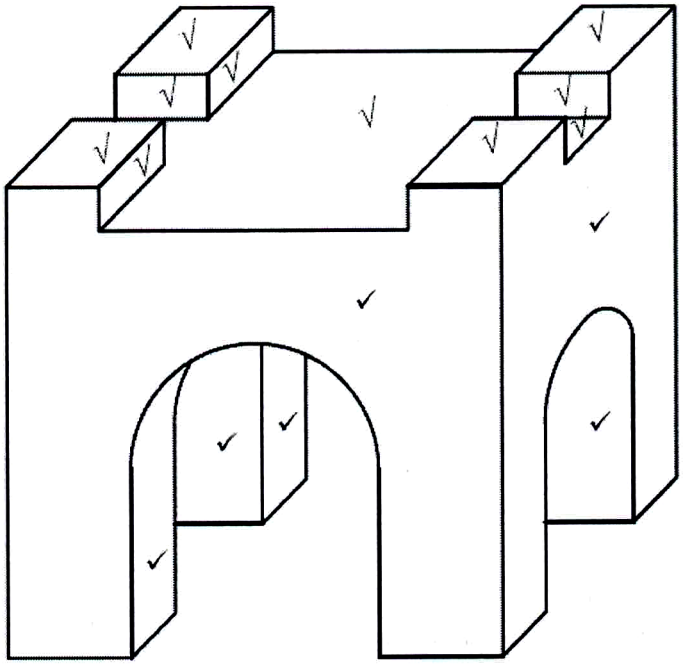

✓ = 1 MARK

√ = ½ MARK

	MARK ALLOCATIONS	
CORRECTNESS	11	
LINE WORK	4	
ACCURACY	3	
LAYOUT & NEATNESS	2	**[20]**

TOTAL: 100

Copyright reserved