higher education & training

Department:
Higher Education and Training
REPUBLIC OF SOUTH AFRICA

NATIONAL CERTIFICATE (VOCATIONAL)

ENGINEERING GRAPHICS AND TECHNOLOGY
NQF LEVEL 2

(12050682)

27 February 2018 (X-Paper)
09:00–13:00

REQUIREMENTS: A2 drawing sheet

Drawing instruments may be used.

This question paper consists of 6 pages.

Copyright reserved

TIME: 4 HOURS
MARKS: 100

INSTRUCTIONS AND INFORMATION

1. Answer ALL the questions.
2. Read ALL the questions carefully.
3. Number the answers according to the numbering system used in this question paper.
4. Use both sides of the DRAWING SHEET.
5. A 15 mm border must be drawn on both sides of the DRAWING SHEET.
6. ALL drawing work, including candidate information, must be done in pencil.
7. A radius curve stencil may be used to draw smaller arcs.
8. Unspecified radii must be R3.
9. A balanced layout is very important and candidates will be penalised for poor planning.
10. ALL drawing work must conform to the latest SANS 10111 Code of Practice for Engineering Drawing.
11. Work neatly.

Copyright reserved

QUESTION 1: FUNDAMENTALS OF ENGINEERING GRAPHICS AND TECHNOLOGY

Give the abbreviations for each of the following terms:

1.1 Hexagon head

1.2 Across flats

1.3 Pitch circle diameter

(3 × 1) (3)

Print the answer in capital letters 5 mm high. (2)

[5]

QUESTION 2: FREEHAND DRAWING

FIGURE 1 below shows the front view of a casting.

Make a freehand drawing of the given view approximately full size.

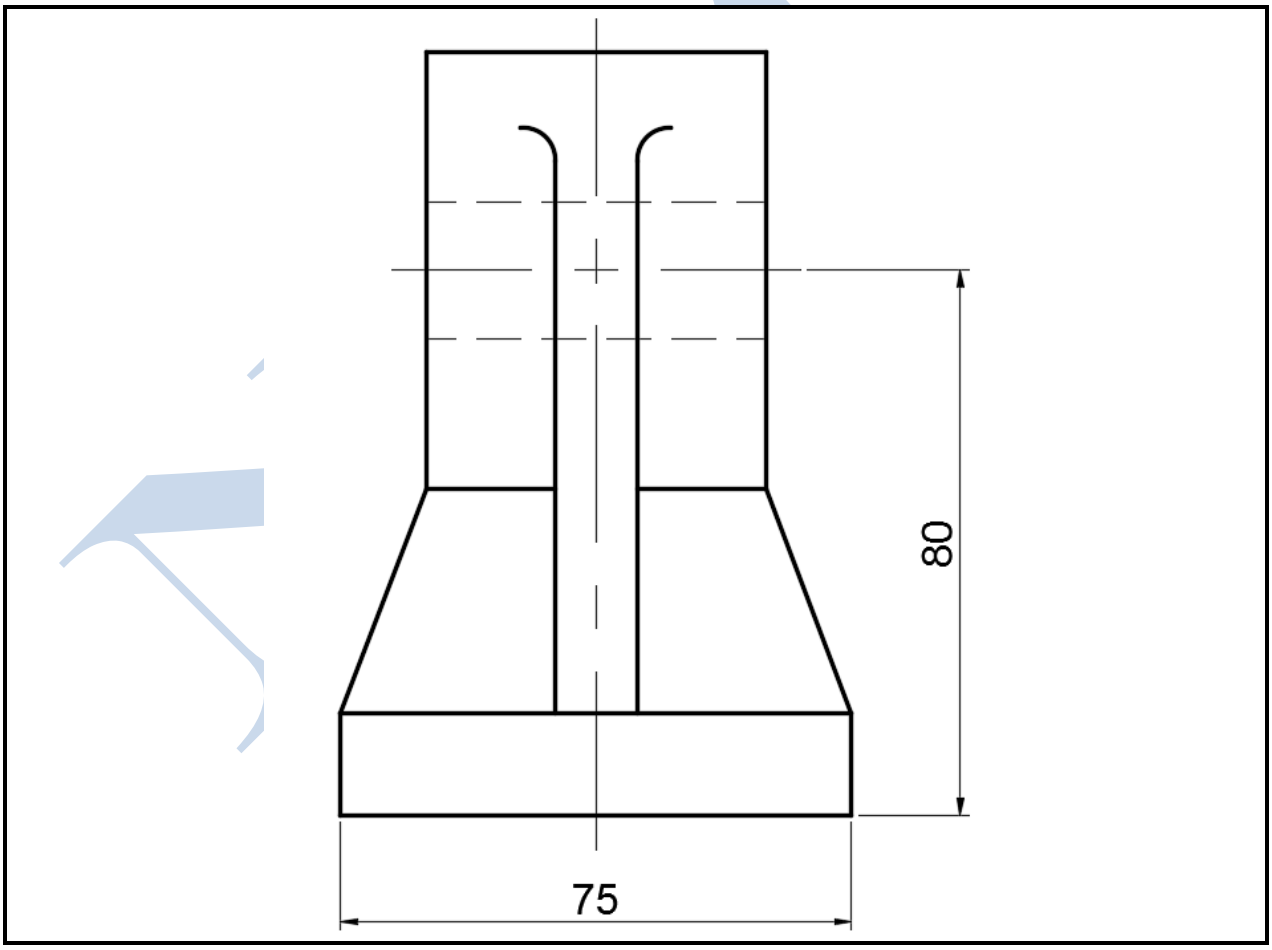

FIGURE 1 **[15]**

QUESTION 3: GEOMETRICAL CONSTRUCTION

FIGURE 2 below shows the front view of a pump cover plate.

Draw, to scale 1 : 1, the given front view of the pump cover plate. Show ALL geometrical construction lines.

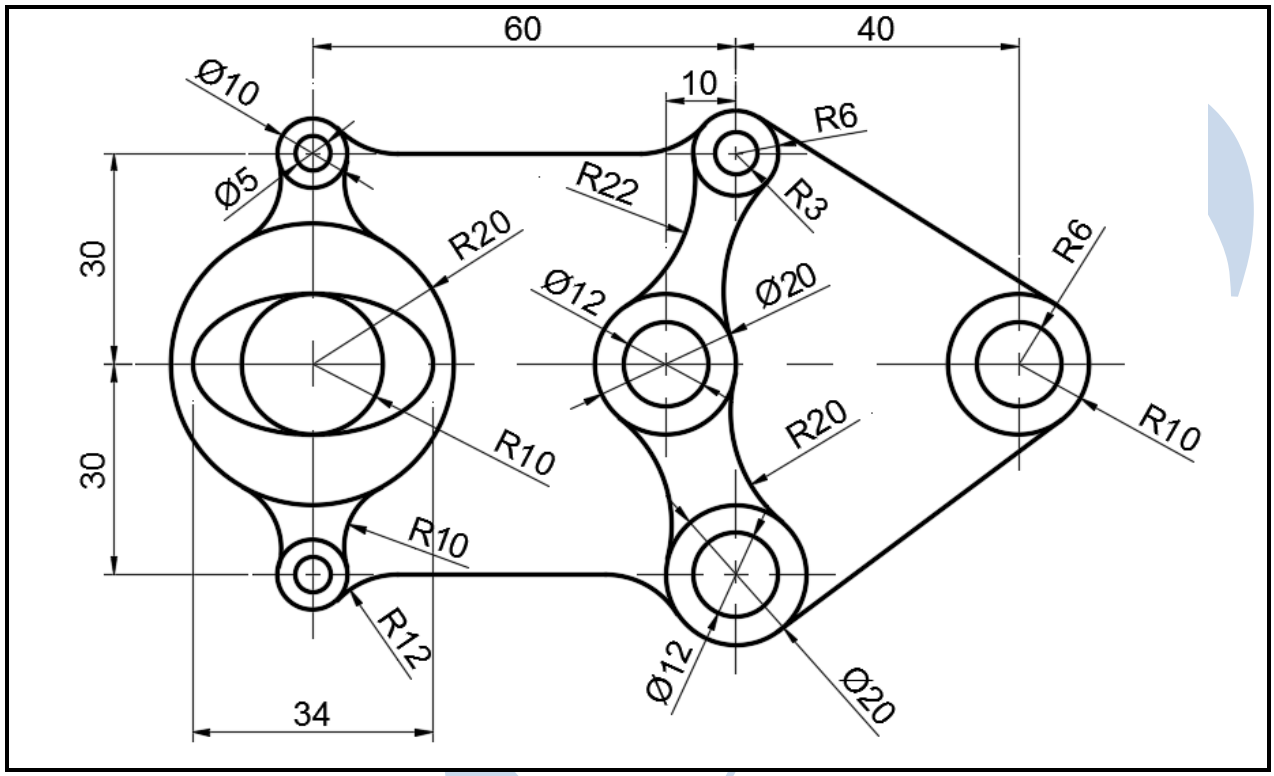

FIGURE 2 **[20]**

QUESTION 4: LOCI

Construct an Archimedean spiral for one and a half convolutions if the vector radii are 20 mm and 80 mm respectively. Show ALL construction lines and numberings. **[15]**

Copyright reserved

QUESTION 5: ORTHOGRAPHIC PROJECTION

FIGURE 4 below shows a hexagonal pyramid resting on a cube.

Draw, to scale 1 : 1, and in first-angle orthographic projection the following views:

5.1 The given front view including the auxiliary view

5.2 A left view

5.3 A top view

Show ALL hidden detail.

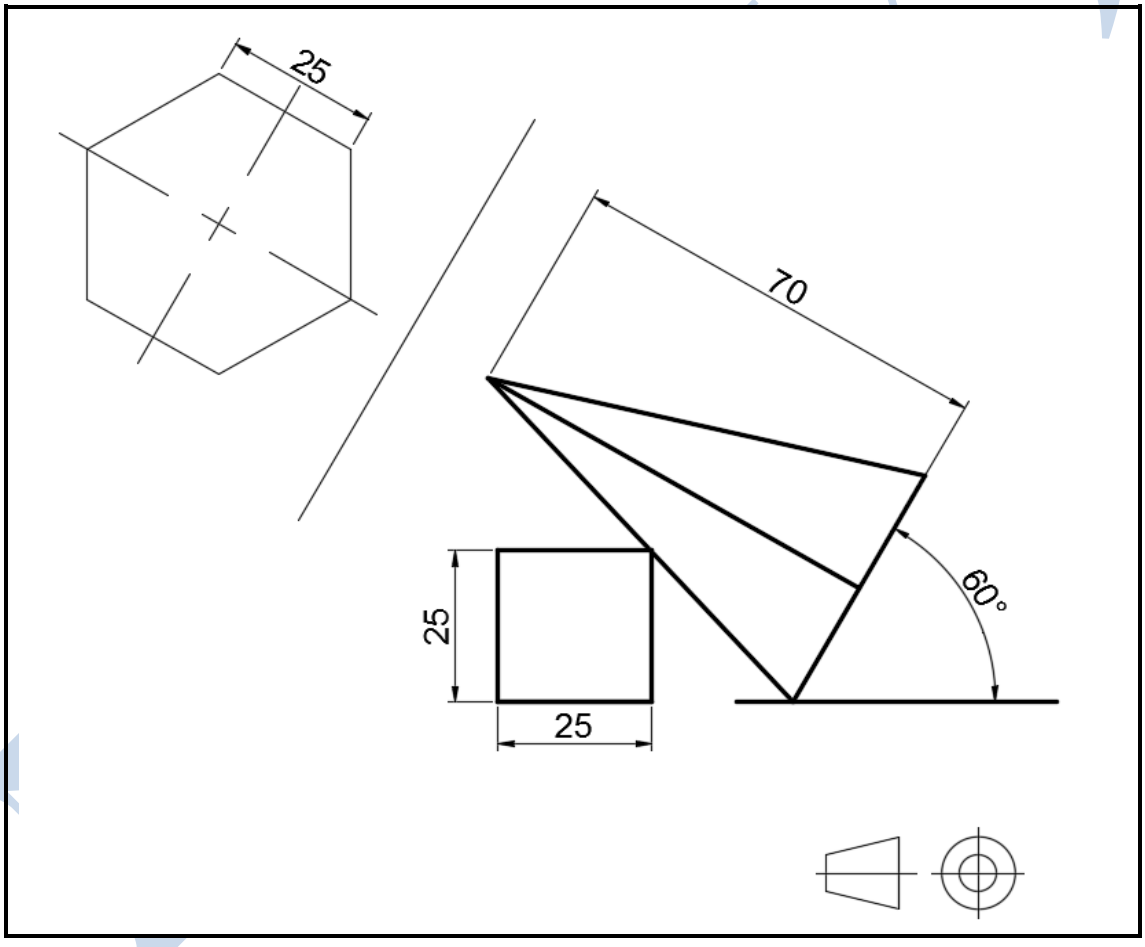

FIGURE 3 **[25]**

QUESTION 6: PERSPECTIVE DRAWING

FIGURE 5 below shows two views of a machined block.

Draw, to scale of 1 : 1, a perspective drawing in two-point perspective of the machine block. Point A is situated on the ground in line with the centre of vision and up against the picture plane. Line AB vanishes to the right at 45°. The distance of the eye in front of the picture plane is 150 mm and the height of the eye above the ground is 110 mm.

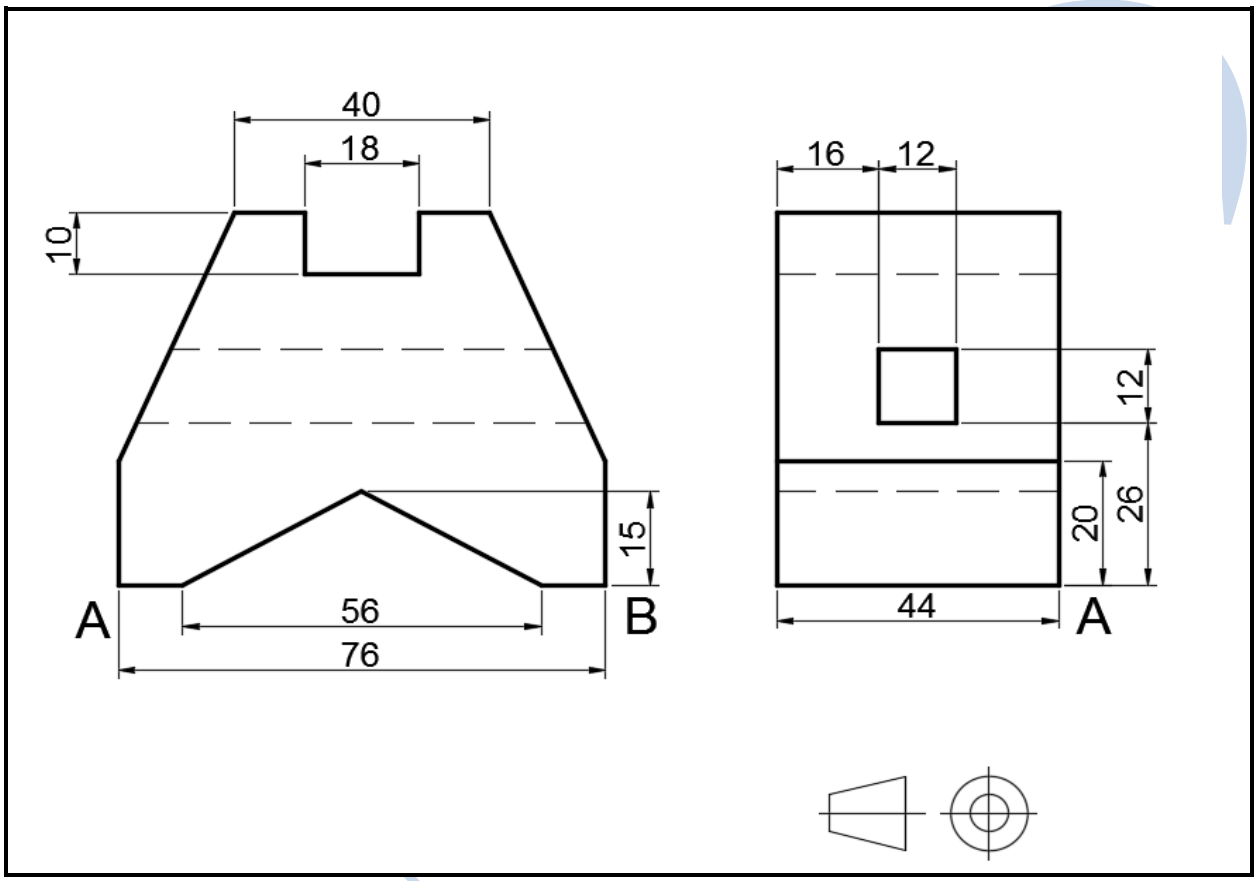

FIGURE 4 **[20]**

TOTAL: 100

Copyright reserved