higher education & training

Department:
Higher Education and Training
REPUBLIC OF SOUTH AFRICA

NATIONAL CERTIFICATE (VOCATIONAL)

ENGINEERING GRAPHICS AND TECHNOLOGY
NQF LEVEL 2

(12050682)

11 December 2020 (X-paper)
09:00–12:00

REQUIREMENTS: A2 drawing sheet

This question paper consists of 7 pages.

547Q1N2011

Copyright reserved

TIME: 3 HOURS
MARKS: 100

INSTRUCTIONS AND INFORMATION

1. Answer all the questions.
2. Read all the questions carefully.
3. Number the answers according to the numbering system used in this question paper.
4. Use both sides of the DRAWING SHEET.
5. Draw a 15 mm border on both sides of the DRAWING SHEET.
6. Make all drawings, including candidate information, in pencil.
7. A radius curve stencil may be used to draw smaller arcs.
8. Unspecified radii must be R6.
9. All drawing work must conform to the latest SANS 10111 Code of Practice for Engineering Drawing.
10. A balanced layout is very important and candidates will be penalised for poor planning.
11. Work neatly.

Copyright reserved

QUESTION 1

1.1 Give THREE uses of dividers in engineering drawing. (3)

1.2 Print the answer to QUESTION 1.1 in 5 mm high CAPITAL LETTERS. (2)
[5]

QUESTION 2

FIGURE 1 shows the front view of a link pin.

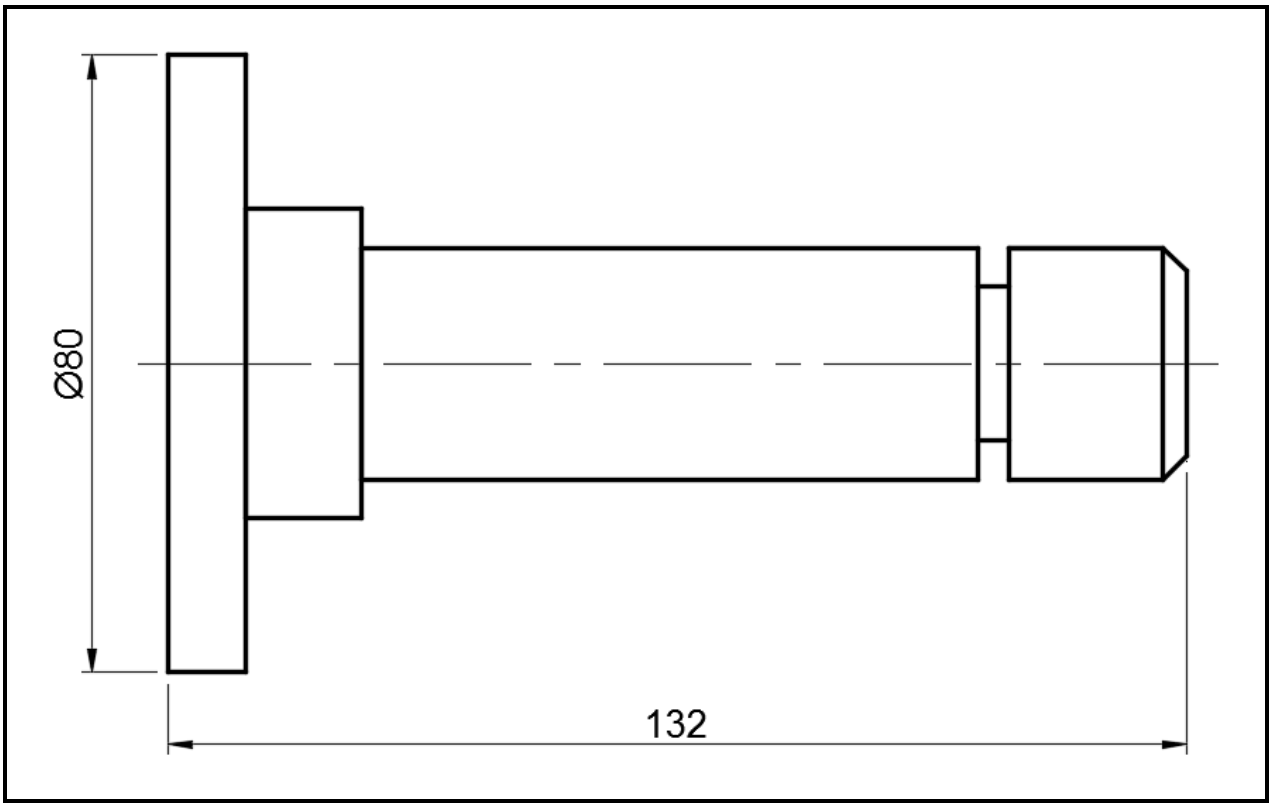

FIGURE 1

Make a freehand drawing of the given view approximately full size. **[15]**

QUESTION 3

FIGURE 2 shows a view of a cover plate for a pump.

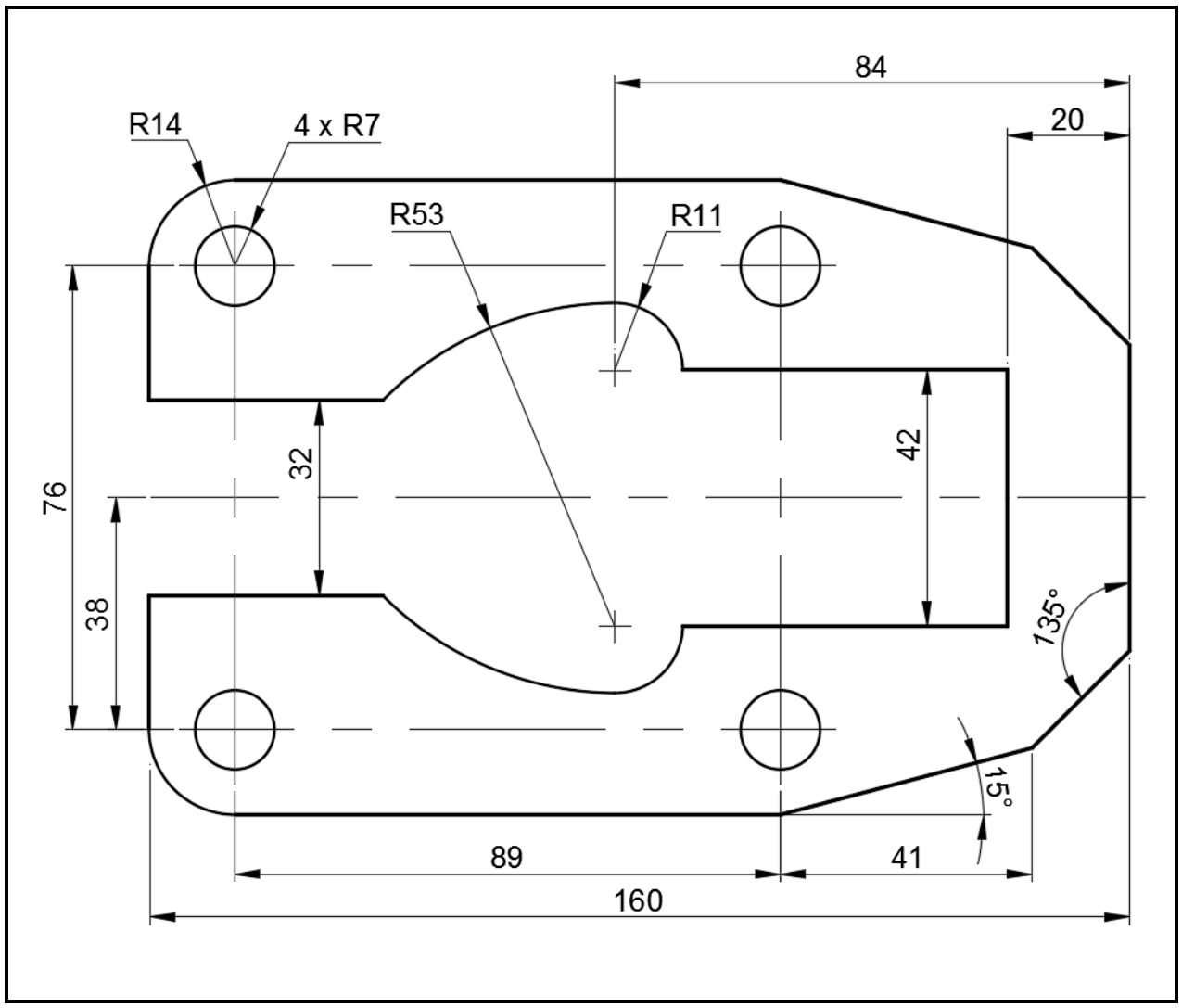

FIGURE 2

Draw, to scale 1:1, the given view of the cover plate. Show all geometrical construction lines. **[20]**

QUESTION 4

FIGURE 3 shows a wheel with a diameter of 50 mm. The wheel rolls towards the right on the horizontal surface for half a revolution and then rolls on the vertical wall in the upward direction for the remaining half of the revolution without slipping.

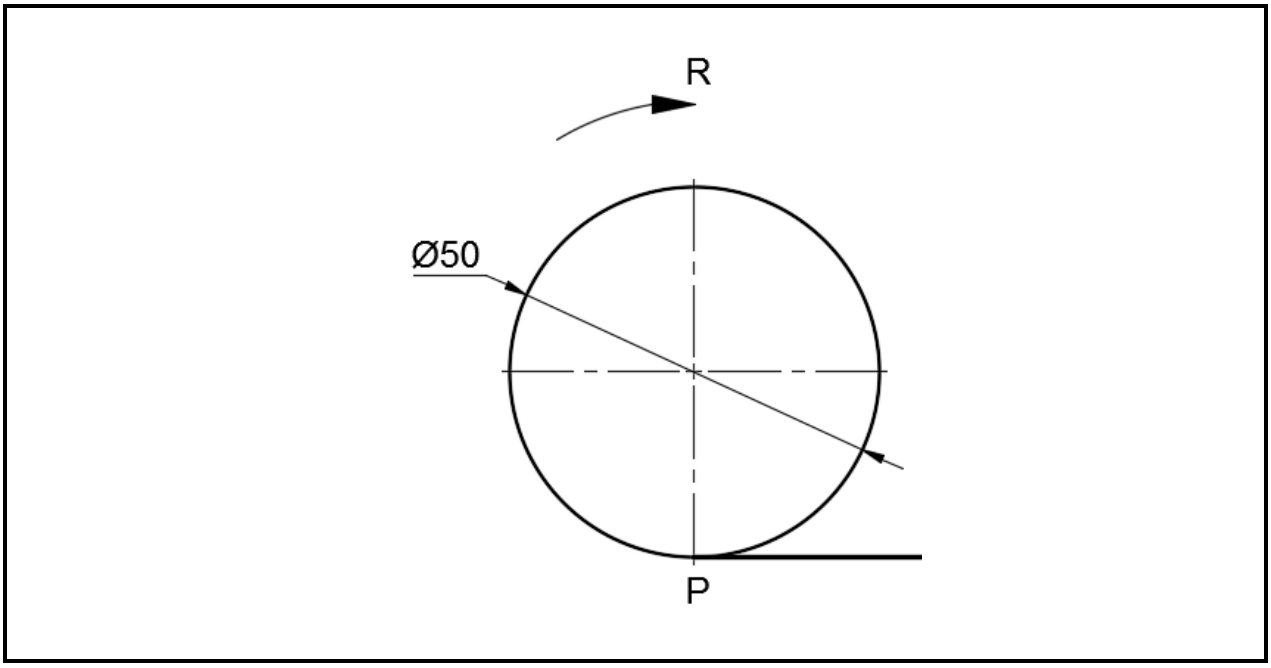

FIGURE 3

Draw the locus of point P on the circumference of the wheel. **[15]**

QUESTION 5

FIGURE 4 shows an isometric view of a machine block.

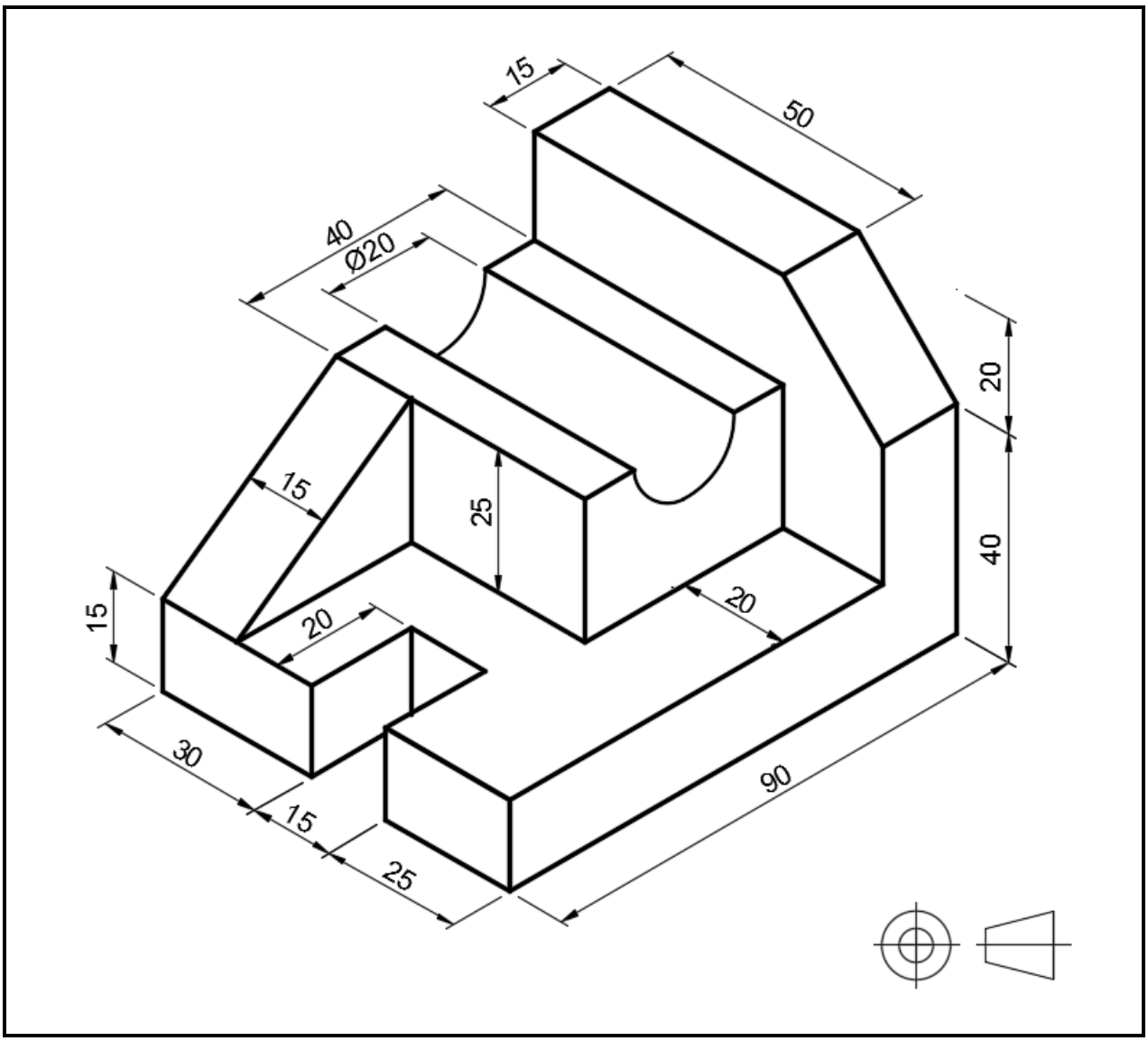

FIGURE 4

Draw, to scale 1:1, the following views in third-angle orthographic projection showing all hidden detail:

5.1 A front view (8)

5.2 A right view (8)

5.3 A top view (9)

[25]

QUESTION 6

FIGURE 5 shows the front and top views of a machine block.

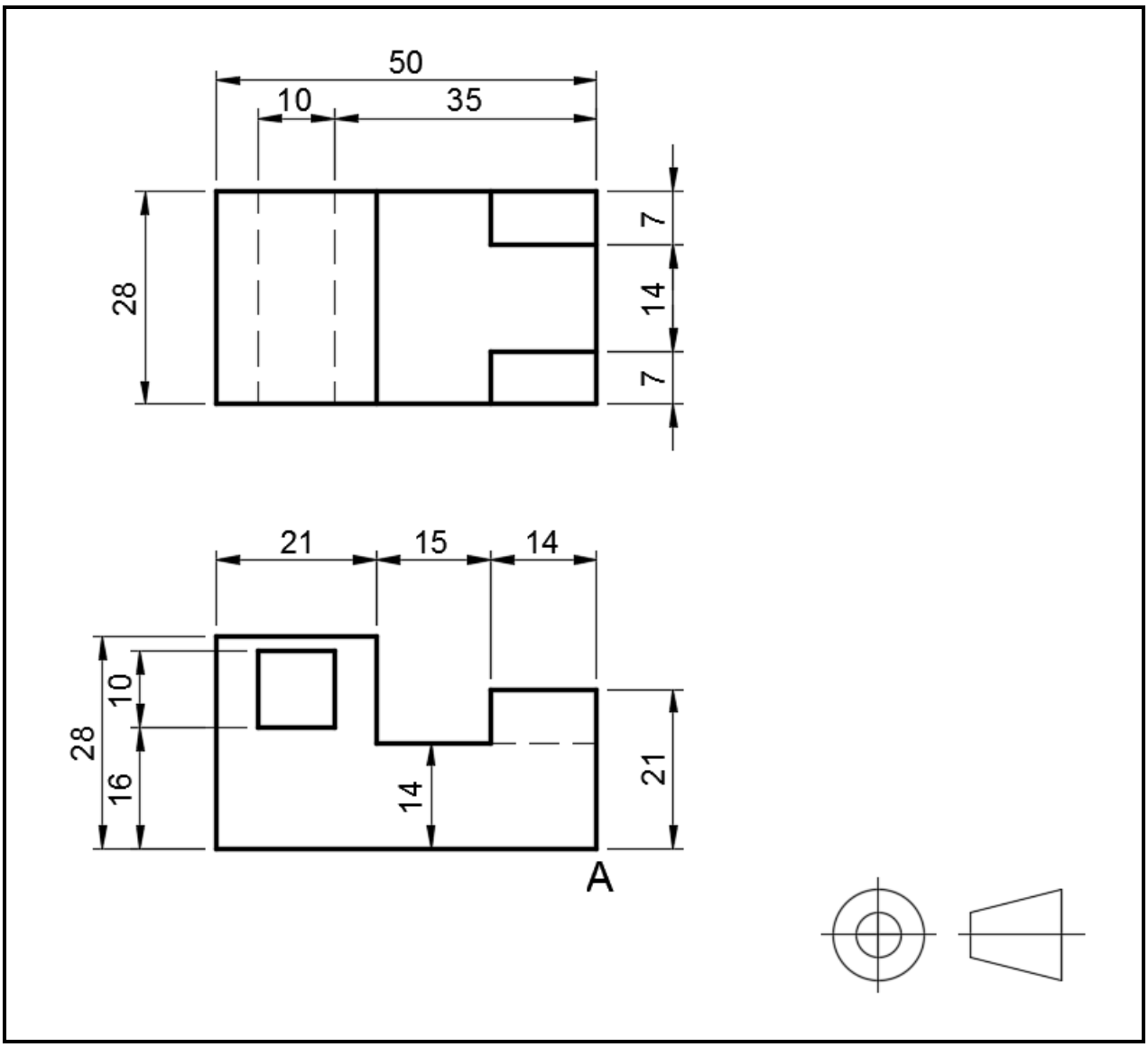

FIGURE 5

Draw, to scale 1:1, a perspective drawing of the machine block in one-point perspective. The distance of the eye in front of the picture plane is 120 mm and the height of the eye above the ground is 70 mm. Point A is situated on the ground, up against the picture plane and in line with the centre of vision. **[20]**

TOTAL: 100

Copyright reserved