higher education & training

Department:
Higher Education and Training
REPUBLIC OF SOUTH AFRICA

NATIONAL CERTIFICATE (VOCATIONAL)

ENGINEERING FABRICATION

(Second Paper)

NQF LEVEL 2

(6031002)

26 November 2018 (X-Paper)
09:00–12:00

REQUIREMENTS: **ONE A2 drawing sheet**

Calculators may be used.

This question paper consists of 5 pages.

NCV

Copyright reserved

TIME: 3 HOURS
MARKS: 75

INSTRUCTIONS AND INFORMATION

1. Answer ALL the questions.
2. Read ALL the questions carefully.
3. Number the answers correctly according to the numbering system used in this question paper.
4. Answer TWO questions on each side of the drawing sheet.
5. Cross out all work you do NOT want to be marked.
6. Work neatly.

NCV

QUESTION 1

1.1 FIGURE 1 shows a hexagonal pipe with sides of 52 mm.

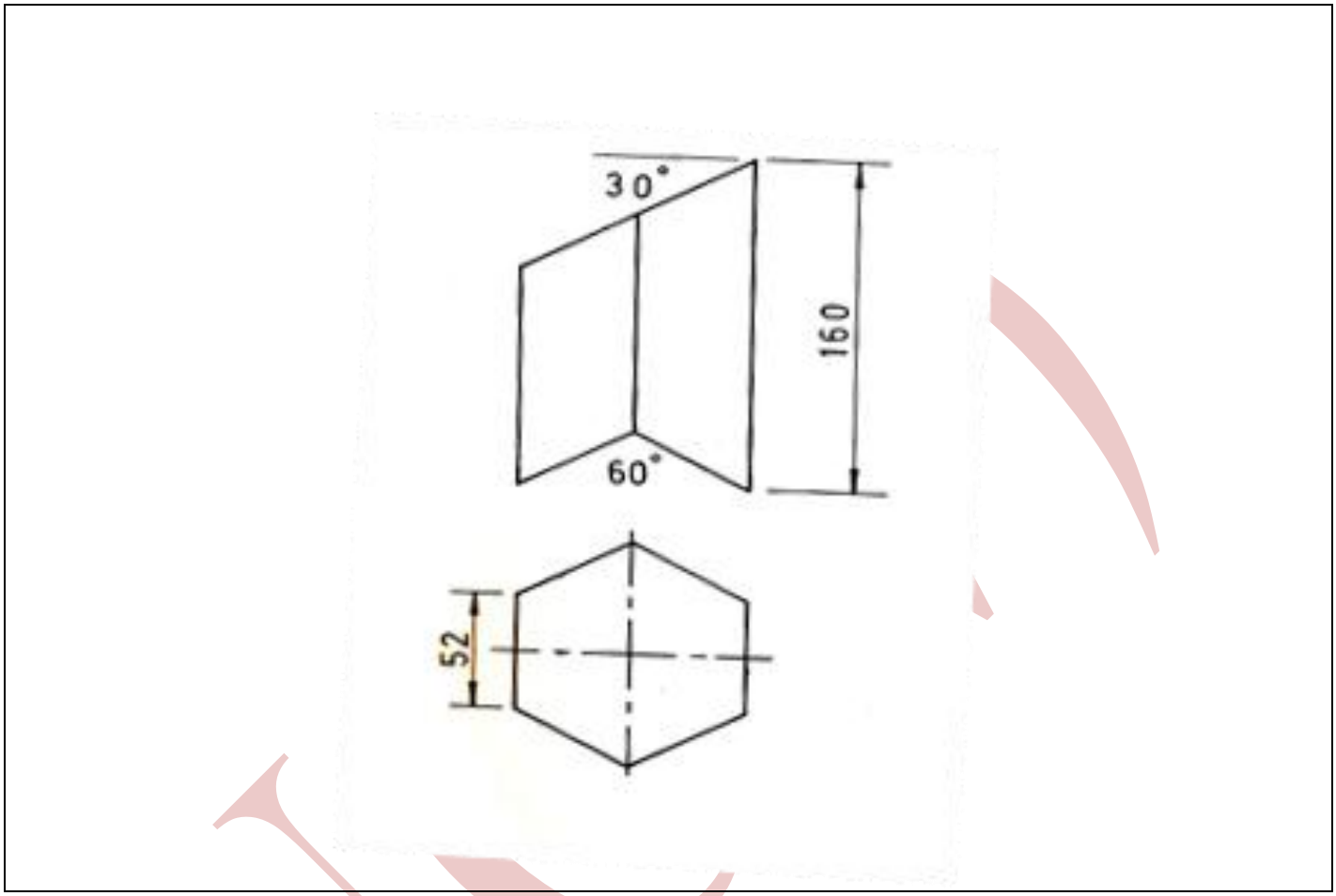

FIGURE 1

1.2 Draw the given views to scale 1:2. (5)

1.3 Develop the pattern of the plate required to make the hexagonal pipe.

NOTE: Open development on the shortest side. (13)

ACCURACY	LINE WORK	NEATNESS	TITLE AND SCALE
2	2	1	2

(7)
[25]

Copyright reserved

QUESTION 2

2.1 FIGURE 2 below shows the front view and the plan of a right pyramid cut at 45 degrees.

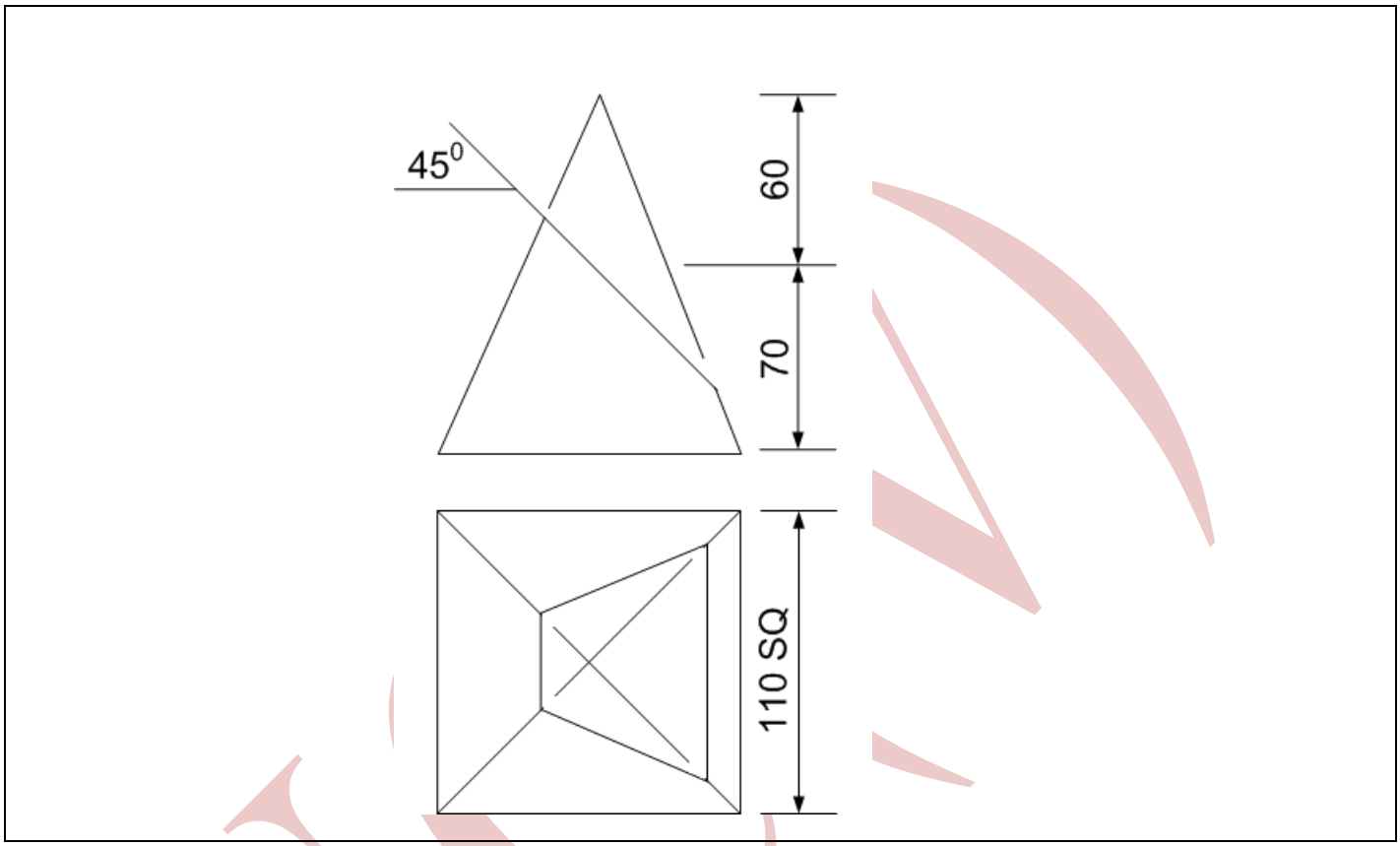

FIGURE 2

2.2 Draw the given views to scale 1:2. (5)

2.3 Develop the pattern of the plate required to make the pyramid using radial lines.

NOTE: Open development on any of the two shorter corners. (13)

ACCURACY	LINE WORK	NEATNESS	TITLE AND SCALE
2	2	1	2

(7)
[25]

QUESTION 3

3.1 FIGURE 3 shows a round-to-square transition piece.

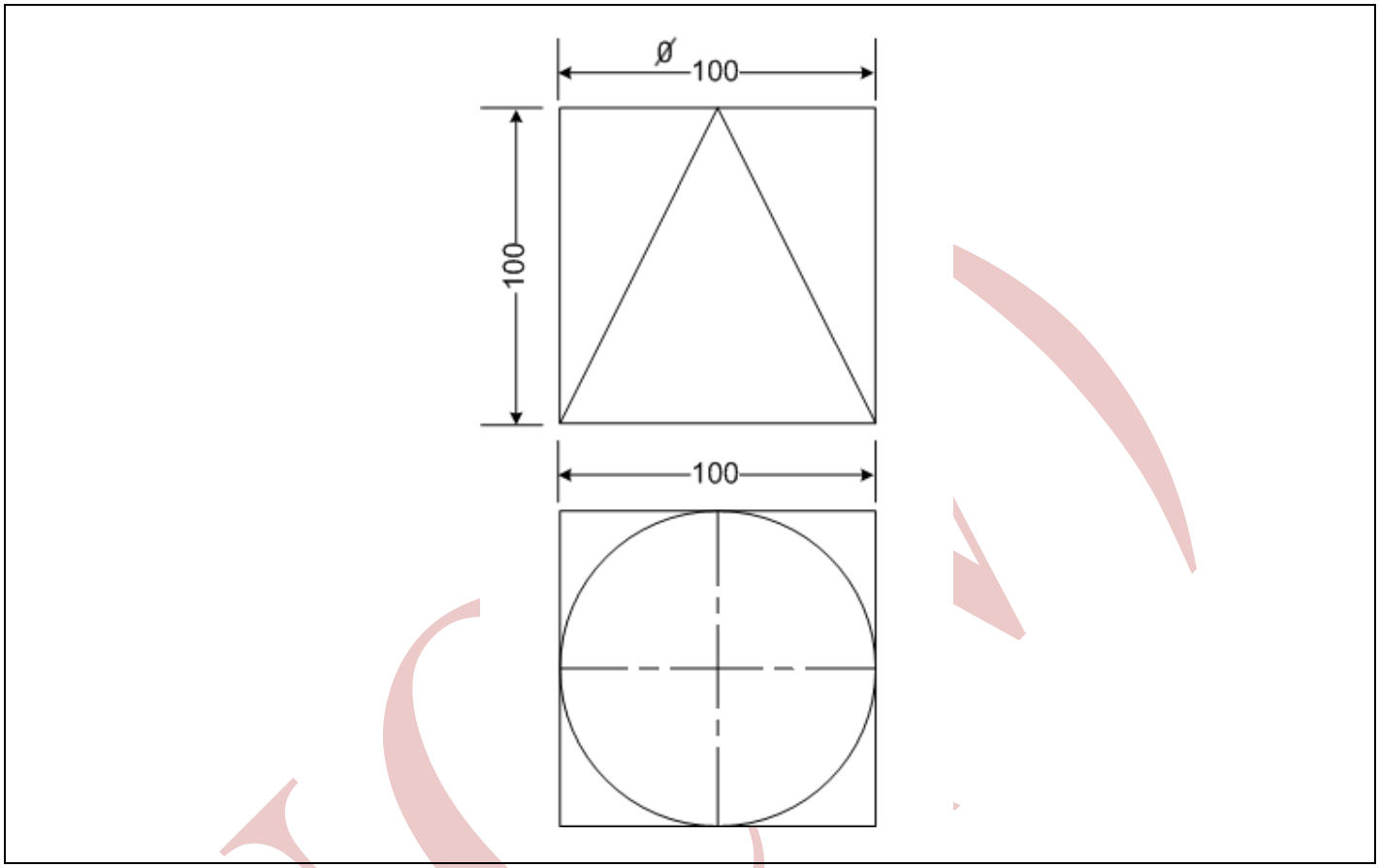

FIGURE 3

3.2 Draw the given views to scale 1:2. (5)

3.3 Develop the pattern of the plate to make the transition piece using the triangulation method.

NOTE: Open development on the centre line. (13)

ACCURACY	LINE WORK	NEATNESS	TITLE AND SCALE
2	2	1	2

(7)

[25]

TOTAL: 75

Copyright reserved