higher education & training

Department:
Higher Education and Training
REPUBLIC OF SOUTH AFRICA

MARKING GUIDELINE

NATIONAL CERTIFICATE (VOCATIONAL)

ENGINEERING FABRICATION
(Second paper)
NQF LEVEL 2

13 March 2020

This marking guideline consists of 6 pages.

Copyright reserved

QUESTION 1

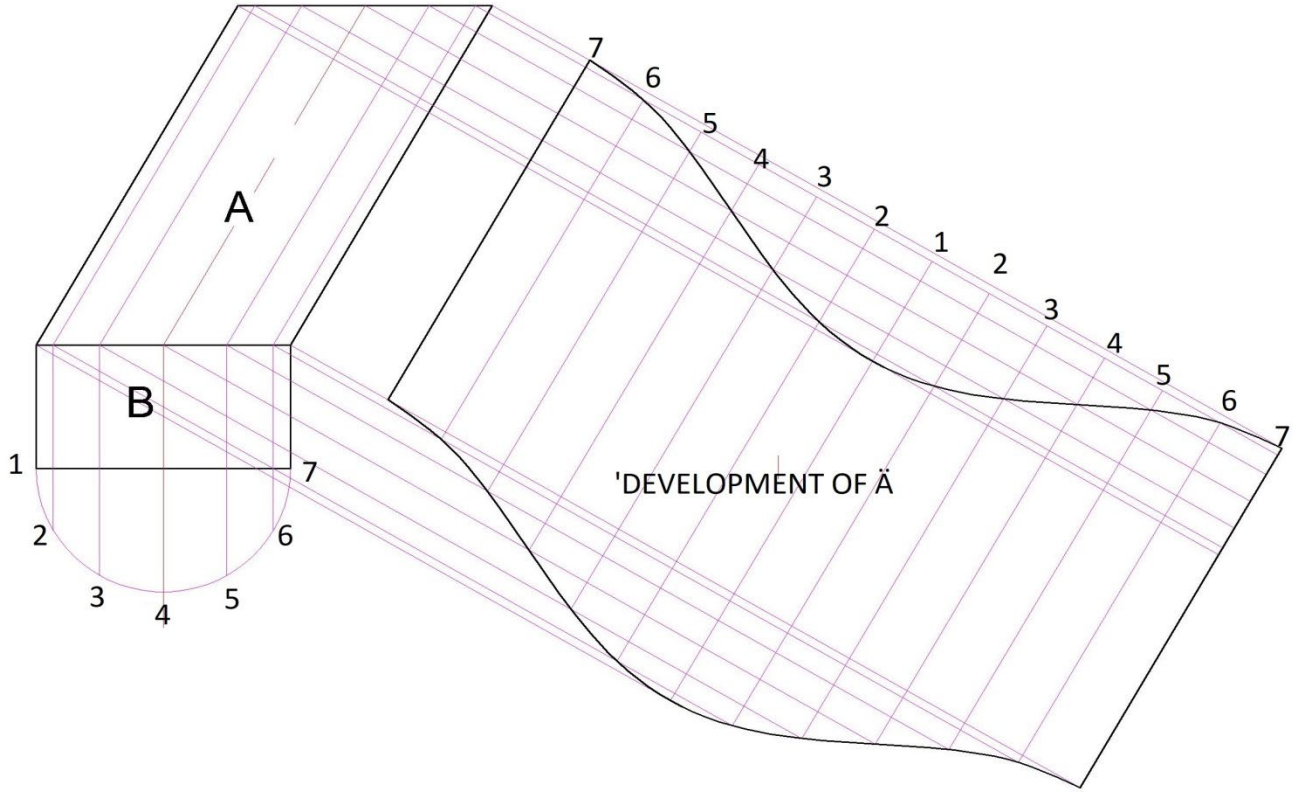

1.1 Given view:

- 60-degree angle (1)
- Height measurement 40 mm (1)
- Diameter measurement 100 mm (1)
- Height measurement 140 mm (1)

1.2 Development of oblique pipe (A):

- Measuring correct total length (4)
- Parallel-line method used (2)
- Correct pattern (8)

Development of pipe at 90-degree angle:

- Accuracy: check only given view (3)
- Neatness (1)

Line work:

- Centre lines (1)
- Solid lines (1)
- Neatness and scale (1)

[25]

QUESTION 2

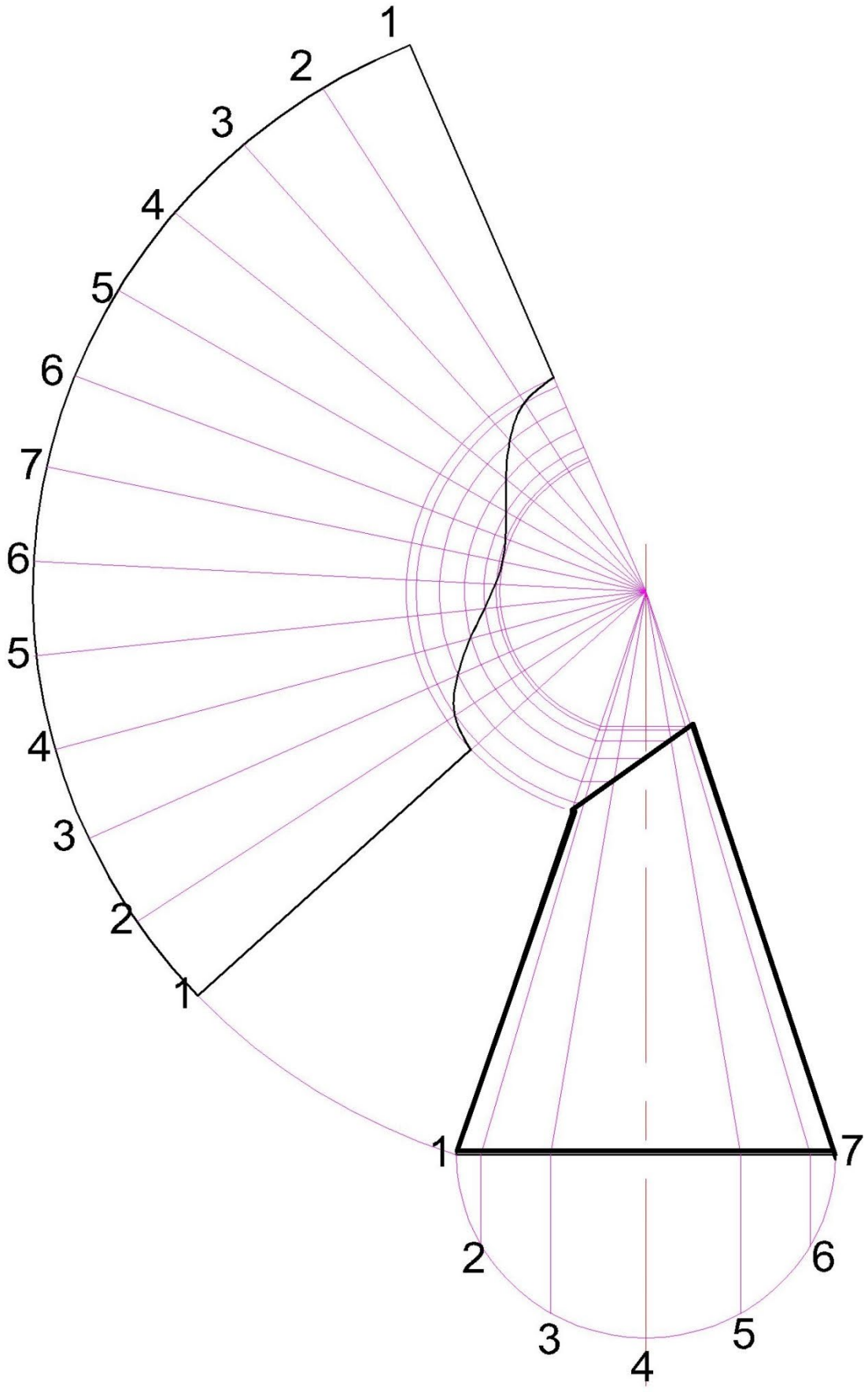

Given view:

- Measurement 280 mm (1)
- Diameter measurement 300 mm (1)
- Height measurement 70 mm (1)
- Height measurement 460 mm (1)

2.2 Development of cone:

- Correct apex length✓ (1)
- Perpendicular height correctly used✓ (1)
- Correct base radial divisions✓✓ (2)
- Right cone principle applied✓✓ (2)
- Radial line method used✓ (1)
- Correct pattern✓✓✓✓✓✓✓ (7)

Accuracy (2)
Neatness (1)

Line work:

- Centre lines (1)
- Solid lines (1)
- Dotted lines (1)

Neatness and scale (1)
[25]

QUESTION 3

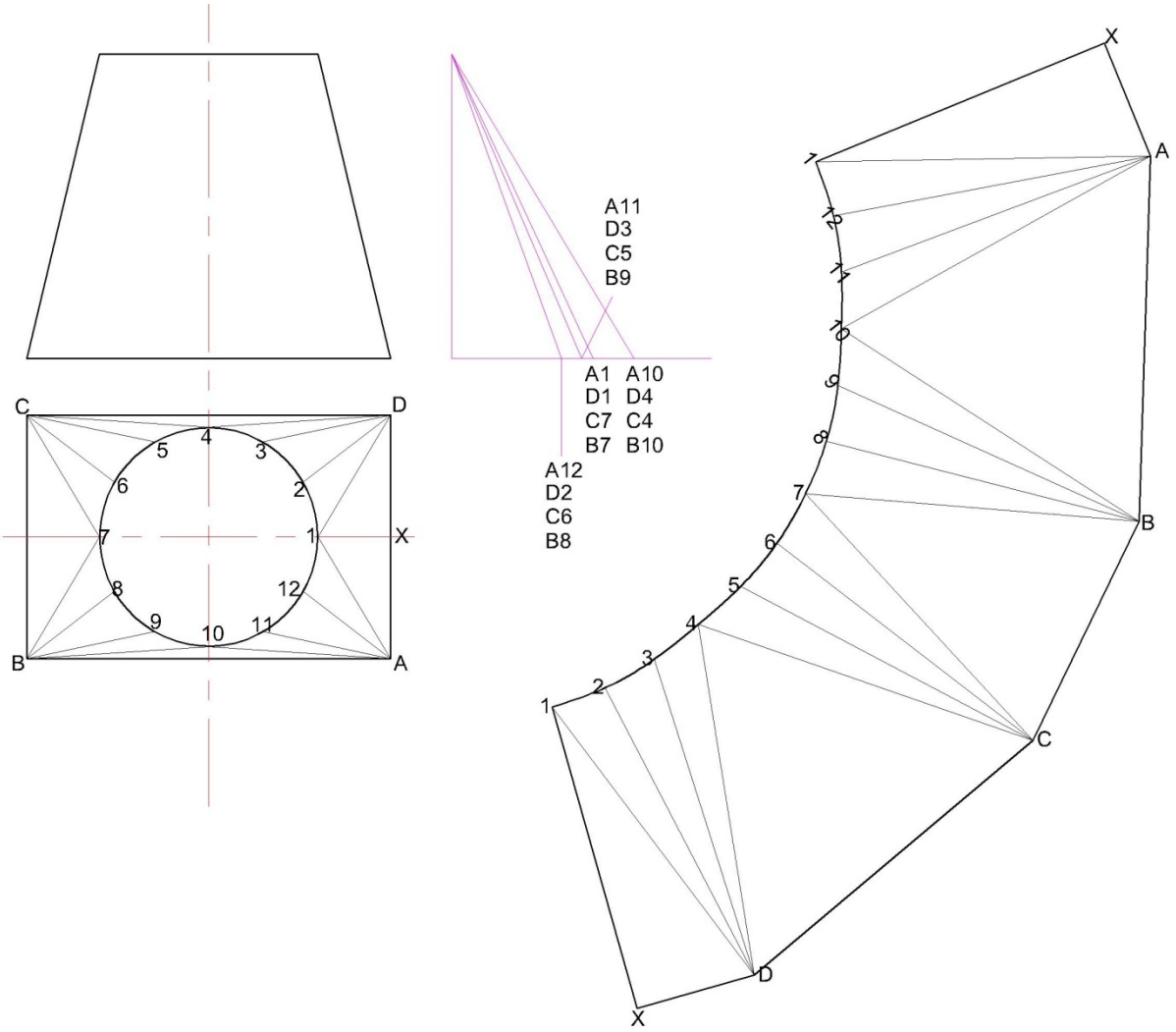

Given view:

- Diameter measurement 72 mm (1)
- Base measurement120 mm (1)
- Height measurement100 mm (1)
- Rectangular 120 × 80 mm (1)

Development of round-to-rectangular transition piece:

- False lengths converted to true lengths.✓✓✓ (3)
- Triangulation principle correctly applied.✓✓ (2)
- Triangulation method used.✓ (1)
- Correct pattern.✓✓✓✓✓✓✓ (7)

Accuracy: check only given view (3)

Neatness (1)

Line work:

- Centre lines (1)
- Solid lines (2)
- Dotted lines

Neatness and scale (1)
[25]

TOTAL: 75

Copyright reserved