higher education & training

Department:
Higher Education and Training
REPUBLIC OF SOUTH AFRICA

NATIONAL CERTIFICATE (VOCATIONAL)

ENGINEERING FABRICATION
(Second paper)
NQF LEVEL 2

(6031002)

13 March 2020 (Y-paper)
13:00–16:00

REQUIREMENTS: ONE A2 drawing sheet

This question paper consists of 5 pages.

563Q2S2013

Copyright reserved

TIME: 3 HOURS
MARKS: 75

INSTRUCTIONS AND INFORMATION

1. Answer all the questions.
2. Read all the questions carefully.
3. Number the answers according to the numbering system used in this question paper.
4. Answer TWO questions on one side of the drawing paper and ONE question on the other side.
5. Drawings must be done in pencil.
6. Work neatly.

Copyright reserved

QUESTION 1

FIGURE 1 shows the connection between a right pipe (B) and an oblique pipe (A).

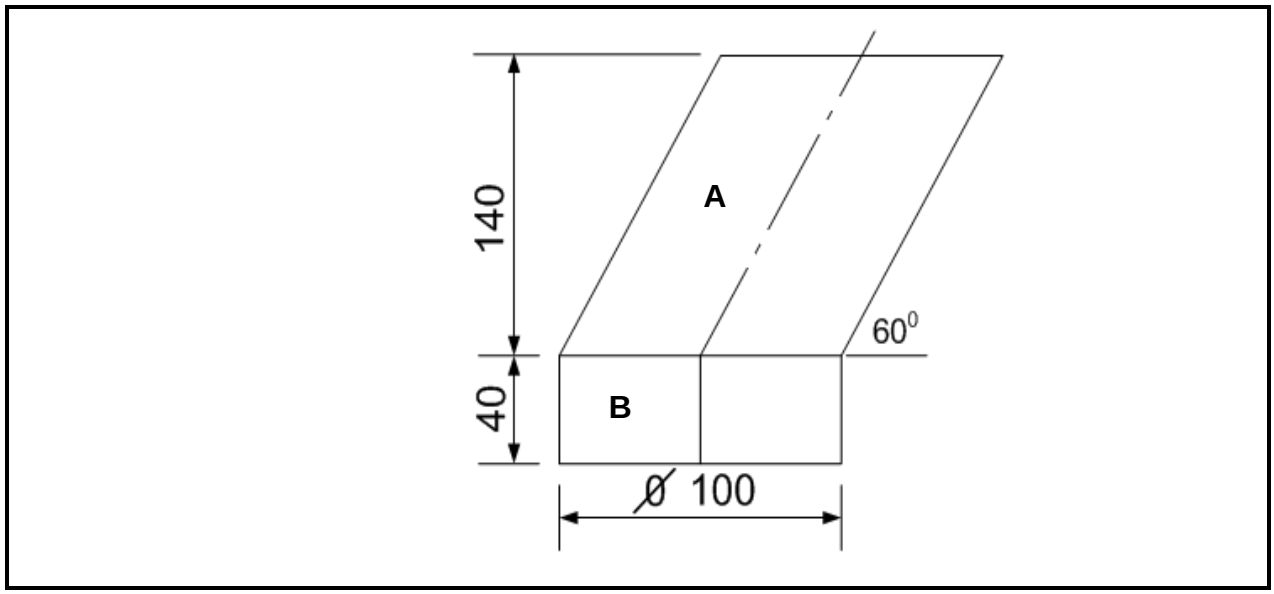

FIGURE 1

1.1 Draw the given view to scale 1:2. (4)

1.2 Develop the pattern of the oblique pipe (A) using the parallel-line method. (14)

NOTE: Open developments on the shorter side.

ACCURACY	NEATNESS	LINE WORK	TITLE AND SCALE
3	1	2	1

(7)
[25]

QUESTION 2

FIGURE 2 shows a right cone with a skew cut from the right-hand side.

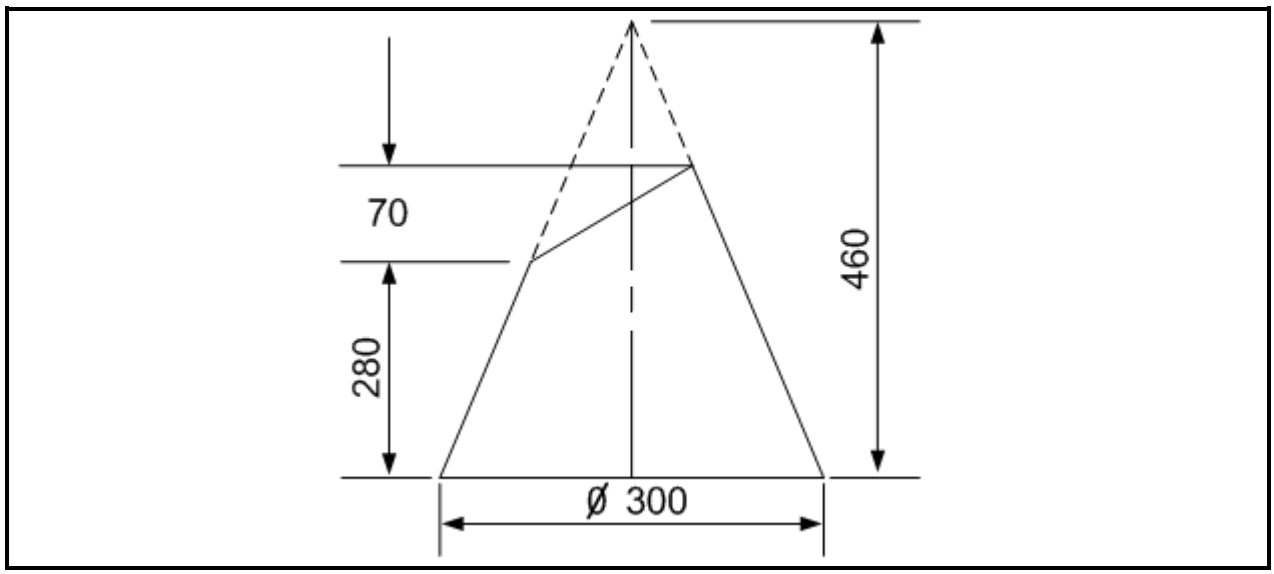

FIGURE 2

2.1 Draw the given view to scale 1:5. (4)

2.2 Develop the pattern of the cone using the radial-line method. (14)

NOTE: Open development on the shorter side.

ACCURACY	NEATNESS	LINE WORK	TITLE AND SCALE
2	1	3	1

(7)
[25]

QUESTION 3

FIGURE 3 shows two views of a rectangular-to-round transition piece.

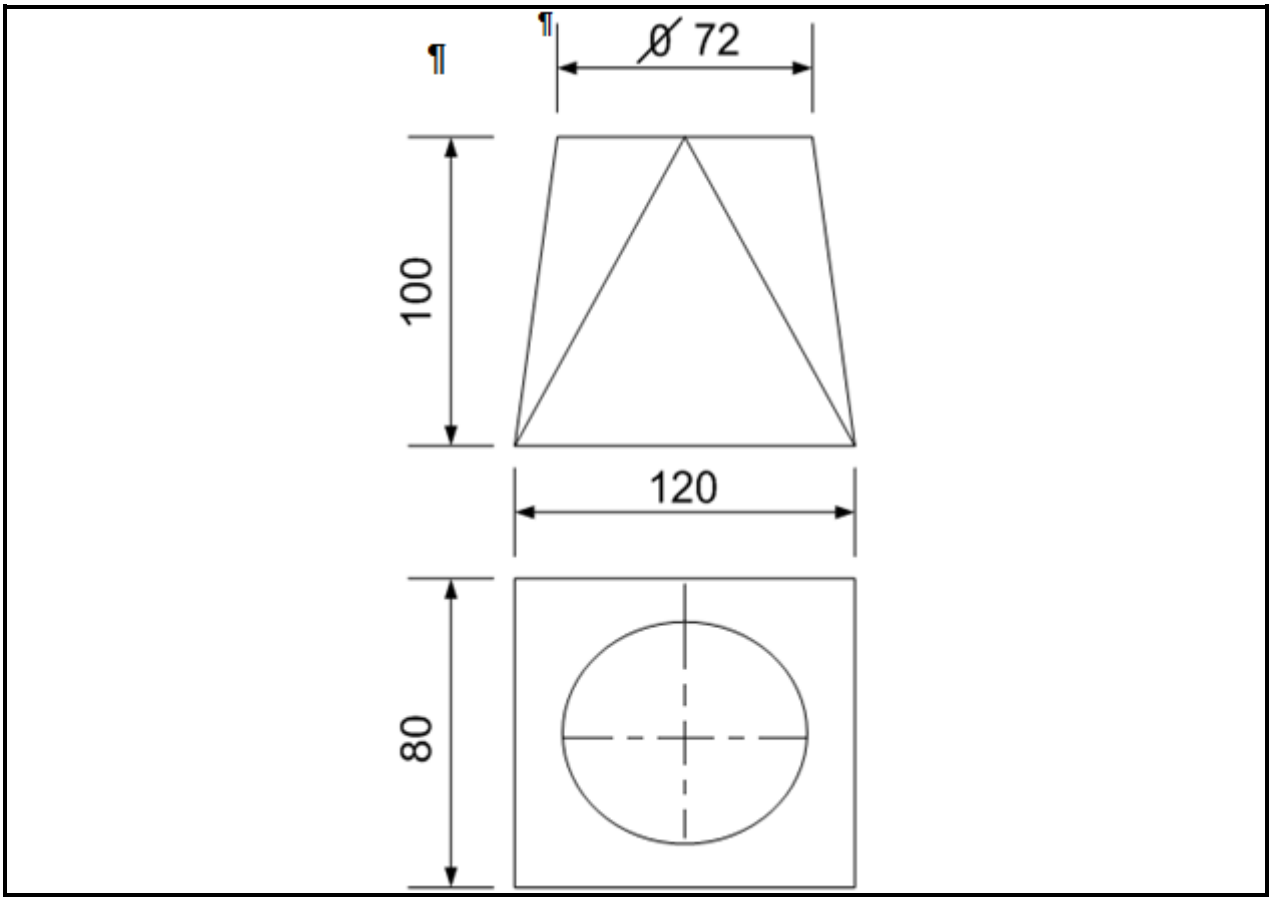

FIGURE 3

3.1 Draw the given view to scale 1:2. (4)

3.2 Develop the pattern of the rectangular-to-round transition piece using the triangulation method. (13)

NOTE: Open development on the side marked with equal signs.

ACCURACY	NEATNESS	LINE WORK	TITLE AND SCALE
3	1	2	1

(8)
[25]

TOTAL: 75

Copyright reserved