higher education & training

Department:
Higher Education and Training
REPUBLIC OF SOUTH AFRICA

NATIONAL CERTIFICATE (VOCATIONAL)

ENGINEERING FABRICATION
(Second Paper)
NQF LEVEL 2

(6031002)

14 March 2018 (X-Paper)
09:00–12:00

REQUIREMENTS: ONE A2 drawing sheet

Calculators may be used.

This question paper consists of 5 pages.

Copyright reserved

TIME: 3 HOURS
MARKS: 75

INSTRUCTIONS AND INFORMATION

1. Answer ALL the questions.
2. Read ALL the questions carefully.
3. Number the answers according to the numbering system used in this question paper.
4. Clearly cross out ALL work you do NOT want to be marked.
5. Answer TWO questions on one side of the drawing paper and ONE question on the other side.
6. Write neatly and legibly.

NSC

QUESTION 1

1.1 FIGURE 1 shows an elbow made of two equal diameter pipes.

Scale 1 : 2

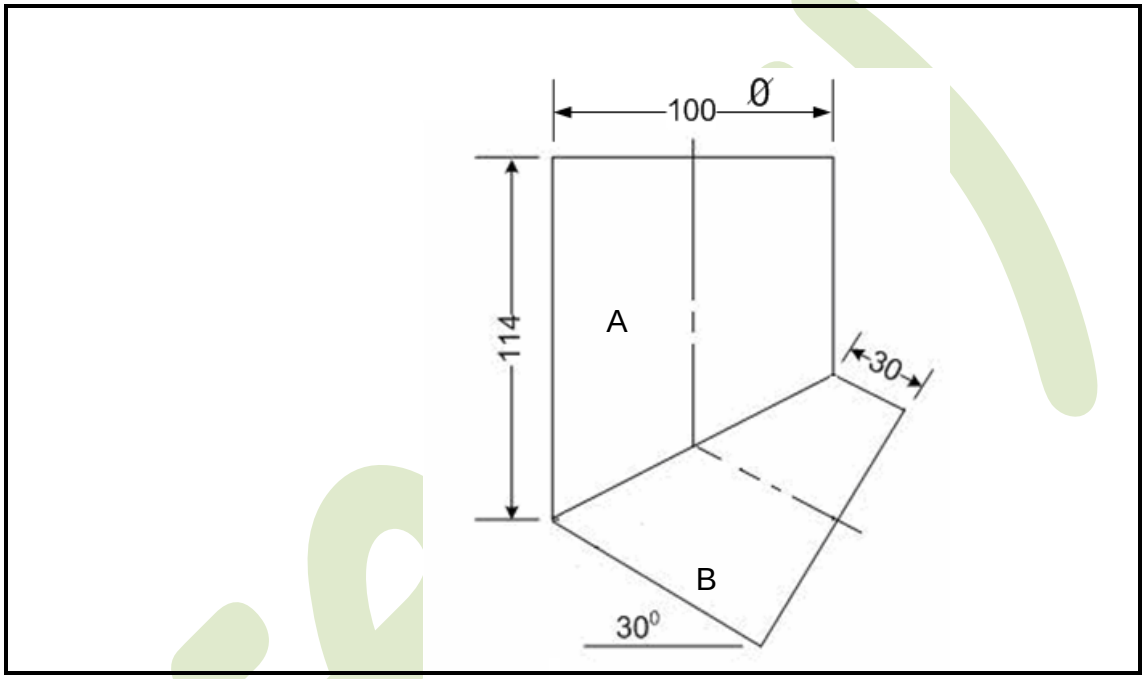

FIGURE 1

1.1 Draw the given elbow. (5)

1.2 Develop the pattern of the plate required to make the pipe marked 'A'. (7)

1.3 Develop the pattern of the plate required to make the pipe marked 'B'. (6)

ACCURACY	LINE WORK	NEATNESS	TITLE AND SCALE
2	2	1	2

(7)

NOTE: Open development on the shortest side **[25]**

Copyright reserved

QUESTION 2

2.1 FIGURE 2 shows a cone cut at 30 degrees.

Scale 1 : 1

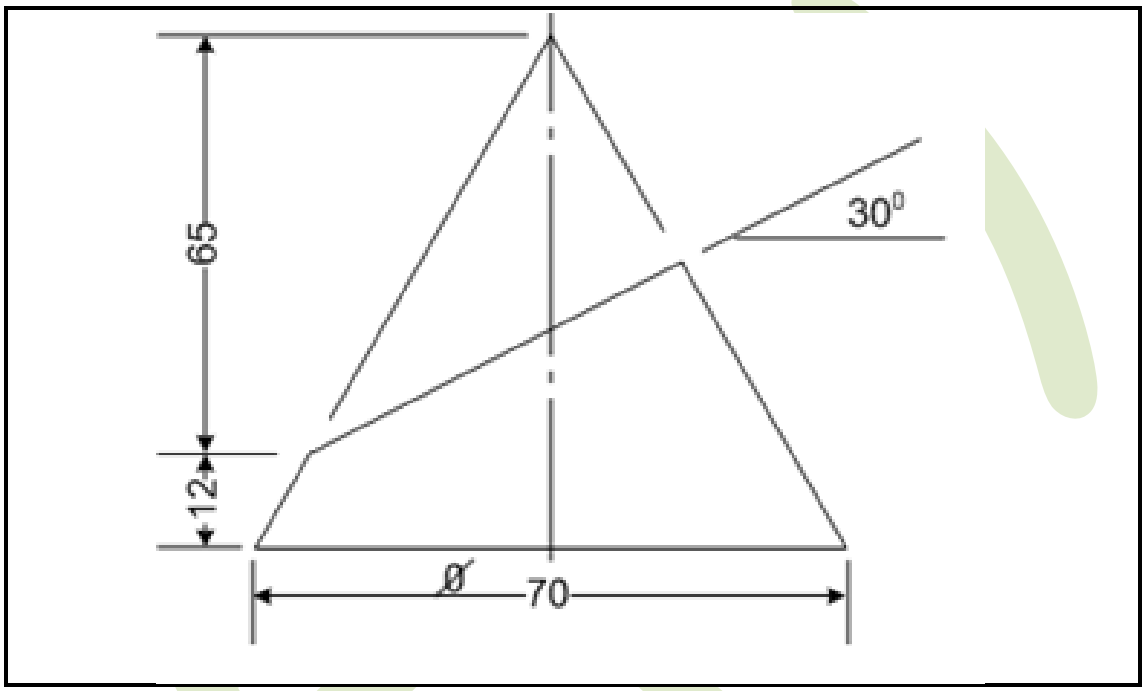

FIGURE 2

2.1 Draw the given view. (5)

2.2 Develop the pattern of the plate needed to make the cone. (13)

ACCURACY	LINE WORK	NEATNESS	TITLE AND SCALE
2	2	1	2

(7)

NOTE: Open development on the shortest side **[25]**

QUESTION 3

3.1 FIGURE 3 shows the front view and an incomplete plan of a right pyramid.

Scale 1 : 2

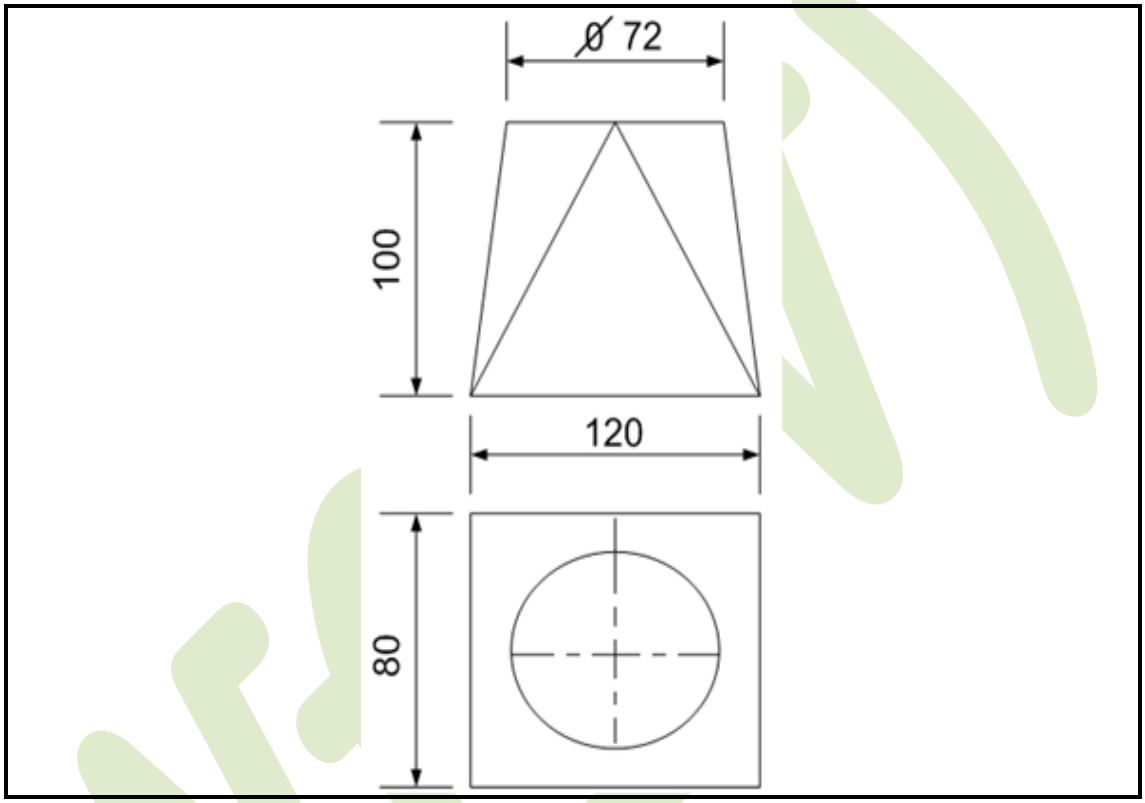

FIGURE 3

3.1 Draw the given views. (5)

2.2 Complete the plan and use the triangulation method to develop the pattern of the pyramid. (13)

ACCURACY	LINE WORK	NEATNESS	TITLE AND SCALE
2	2	1	2

(7)

NOTE: Open development on the shortest side **[25]**

TOTAL: 75

Copyright reserved