higher education & training

Department:
Higher Education and Training
REPUBLIC OF SOUTH AFRICA

NATIONAL CERTIFICATE (VOCATIONAL)

ENGINEERING FABRICATION
(Second paper)
NQF LEVEL 2

(6031002)

7 December 2020 (Y-paper)
13:00–16:00

This question paper consists of 5 pages.

349Q2N2007

Copyright reserved

TIME: 3 HOURS
MARKS: 75

INSTRUCTIONS AND INFORMATION

1. Answer all the questions.
2. Read all the questions carefully.
3. Number the answers according to the numbering system used in this question paper.
4. Answer TWO questions on one side of the drawing paper and the third on the reverse side.
5. Use only a pencil for drawings and a black pen for writing your ID number.
6. Write neatly and legibly.

Copyright reserved

QUESTION 1

FIGURE 1 below shows an intersection between an oblique pipe and two equal-diameter right pipes.

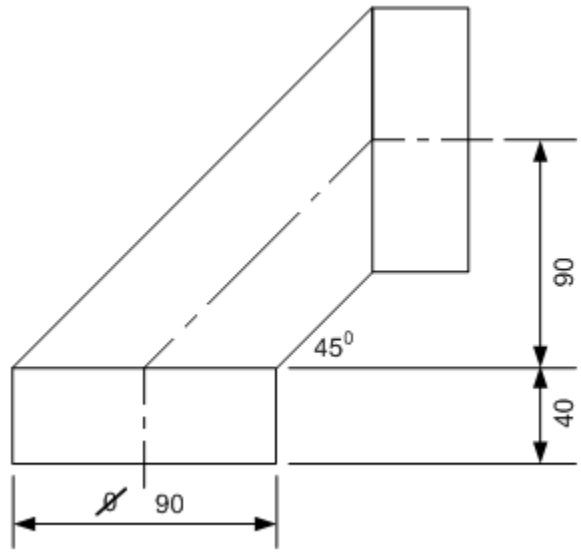

FIGURE 1

Draw to a scale of 1:2 the following:

1.1 The given view. (4)

1.2 Using the parallel-line method, develop the pattern of an oblique pipe. (14)

ACCURACY	NEATNESS	LINE WORK	TITLE AND SCALE
3	1	1	1

(7)

NOTE: Open development on the shortest side. **[25]**

Copyright reserved

QUESTION 2

FIGURE 2 below shows an oblique cone which has been cut parallel to the base.

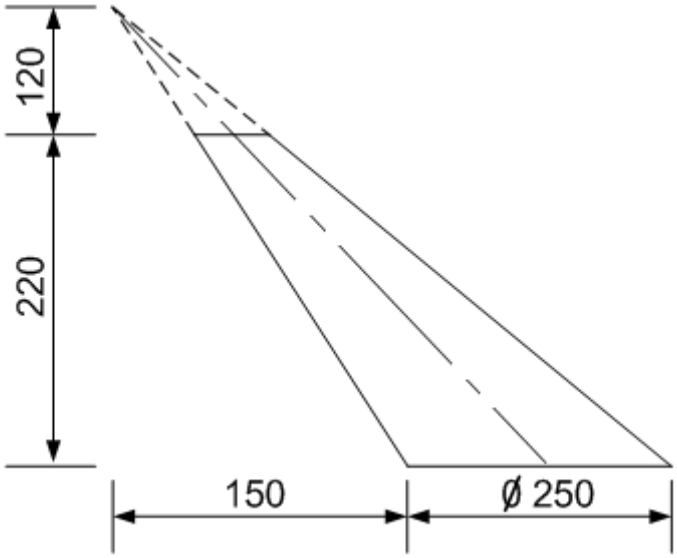

FIGURE 2

Draw to a scale of 1: 5 the following:

2.1 The given view. (4)

2.2 Using the radial line method, develop the pattern of an oblique cone. (14)

ACCURACY	NEATNESS	LINE WORK	TITLE AND SCALE
2	1	3	1

(7)

NOTE: Open development on the shortest side. **[25]**

QUESTION 3

FIGURE 3 below shows two views of a rectangular-to-round transition piece.

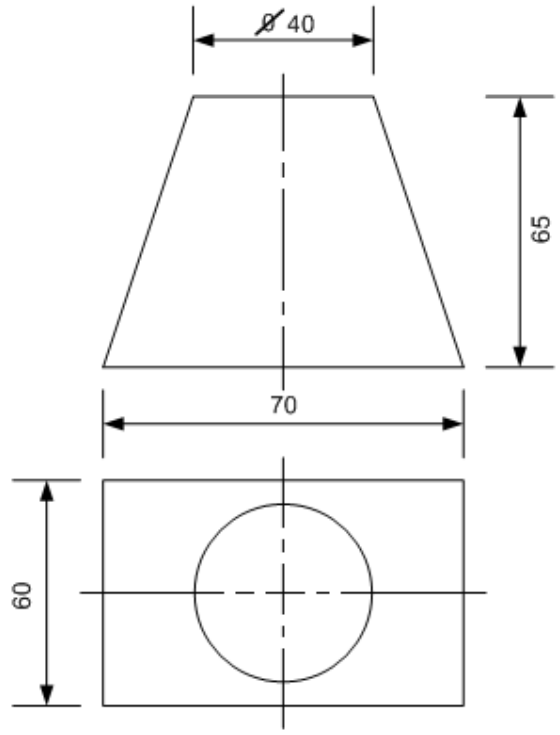

FIGURE 3

Draw to a scale of 1:1 the following:

3.1 The given view. (5)

3.2 Using the triangulation method, develop the pattern of the rectangular-to-round transition piece. (13)

ACCURACY	NEATNESS	LINE WORK	TITLE AND SCALE
3	1	2	1

(7)

NOTE: Open development on the shortest side. **[25]**

TOTAL: 75

Copyright reserved