higher education & training

Department:
Higher Education and Training
REPUBLIC OF SOUTH AFRICA

NATIONAL CERTIFICATE (VOCATIONAL)

ELECTROTECHNOLOGY
NQF LEVEL 4

(12040594)

18 November 2019 (X-Paper)
09:00–12:00

This question paper consists of 6 pages.

Copyright reserved

TIME: 3 HOURS
MARKS: 100

INSTRUCTIONS AND INFORMATION

1. Answer ALL the questions.
2. Read ALL the questions carefully.
3. Number the answers according to the numbering system used in this question paper.
4. Start each question on a NEW page.
5. Write neatly and legibly.

Copyright reserved

QUESTION 1

1.1 Give FIVE characteristics of a three-phase induction motor. (5)

1.2 A three-phase motor is constructed of a rotor and a stator.

Explain, with the aid of a drawing, what *slip* is in relation to the rotating magnetic field. (4 + 3) (7)

1.3 Make a fully labelled drawing of a squirrel-cage rotor. (6)

1.4 Determine the synchronous speed of an induction motor running on a supply with a frequency of 50 hertz and SIX stator poles. (2)

[20]

QUESTION 2

2.1 Design the emergency-stop control circuit that can protect TWO three-phase motor-driven machines such as lathes. (8)

2.2 2.2.1 Refer to FIGURE 1 and design a three-phase control circuit for a starter for a heavy-loaded iron-core conveyor belt. (6)

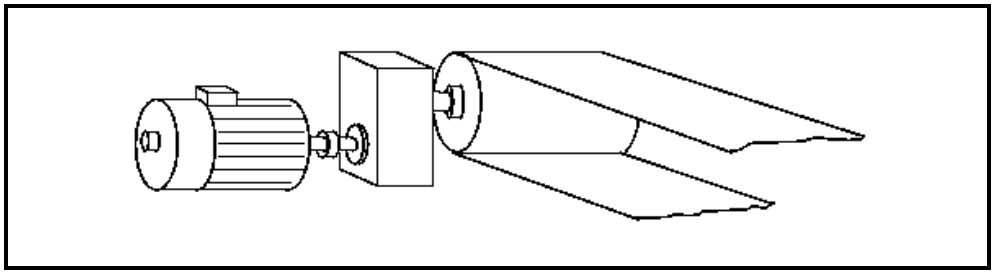

FIGURE 1

2.2.2 Explain the basic operation of the starter in QUESTION 2.2.1. (3)

2.3 2.3.1 Draw the symbol of an overload-protection relay. (1)

2.3.2 Explain the function of an overload-protection relay. (2)

[20]

Copyright reserved

QUESTION 3

3.1 Management has decided to install a three-phase motor-driven automated gate system in the factory as shown in FIGURE 2.

Design brief:

You must plan and design a gate system that incorporates a control circuit and a power circuit. An on/off control must be incorporated in the system. The gate will open when a company truck is scanned by a bar-code scanner and stopped by the left limit switch. A timer will be used to automatically close the gate after 20 seconds. The right limit switch is used to stop the gate when it is closed.

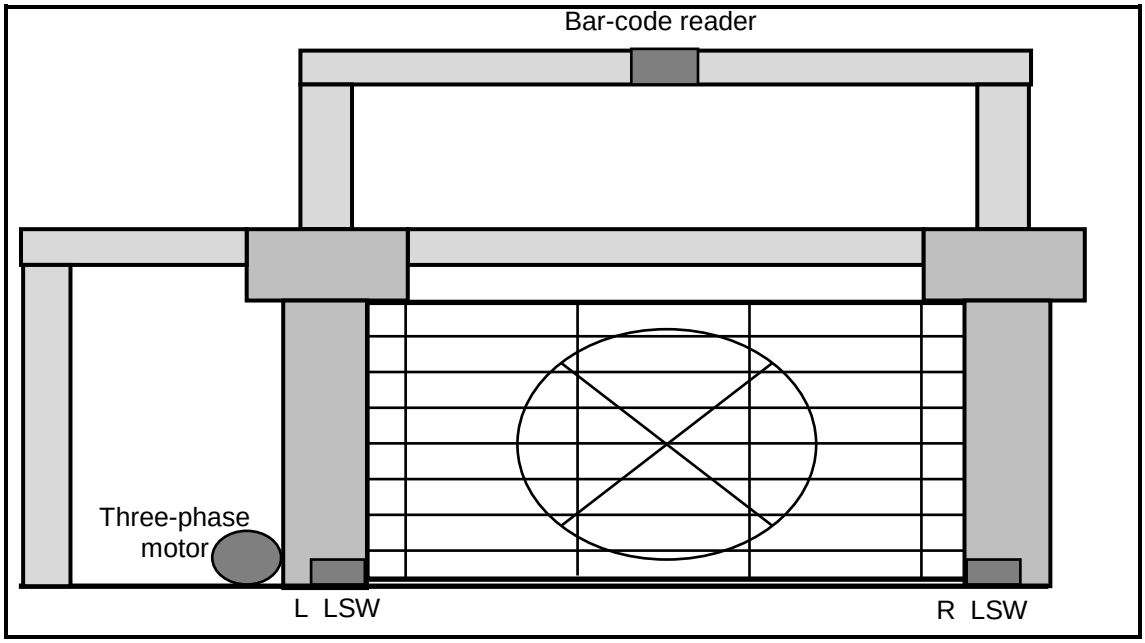

FIGURE 2 (14)

3.2 Differentiate between *software-driven speed drivers* and *manual-controlled speed drivers*. (3)

3.3 Name THREE types of motor-speed control techniques. (3)
[20]

QUESTION 4

4.1 Explain the importance of modifying hardwired relay-logic controlled applications to PLC systems. (4)

4.2 Convert the hardwired jogging circuit in FIGURE 3 to a PLC control system by using ladder programming.

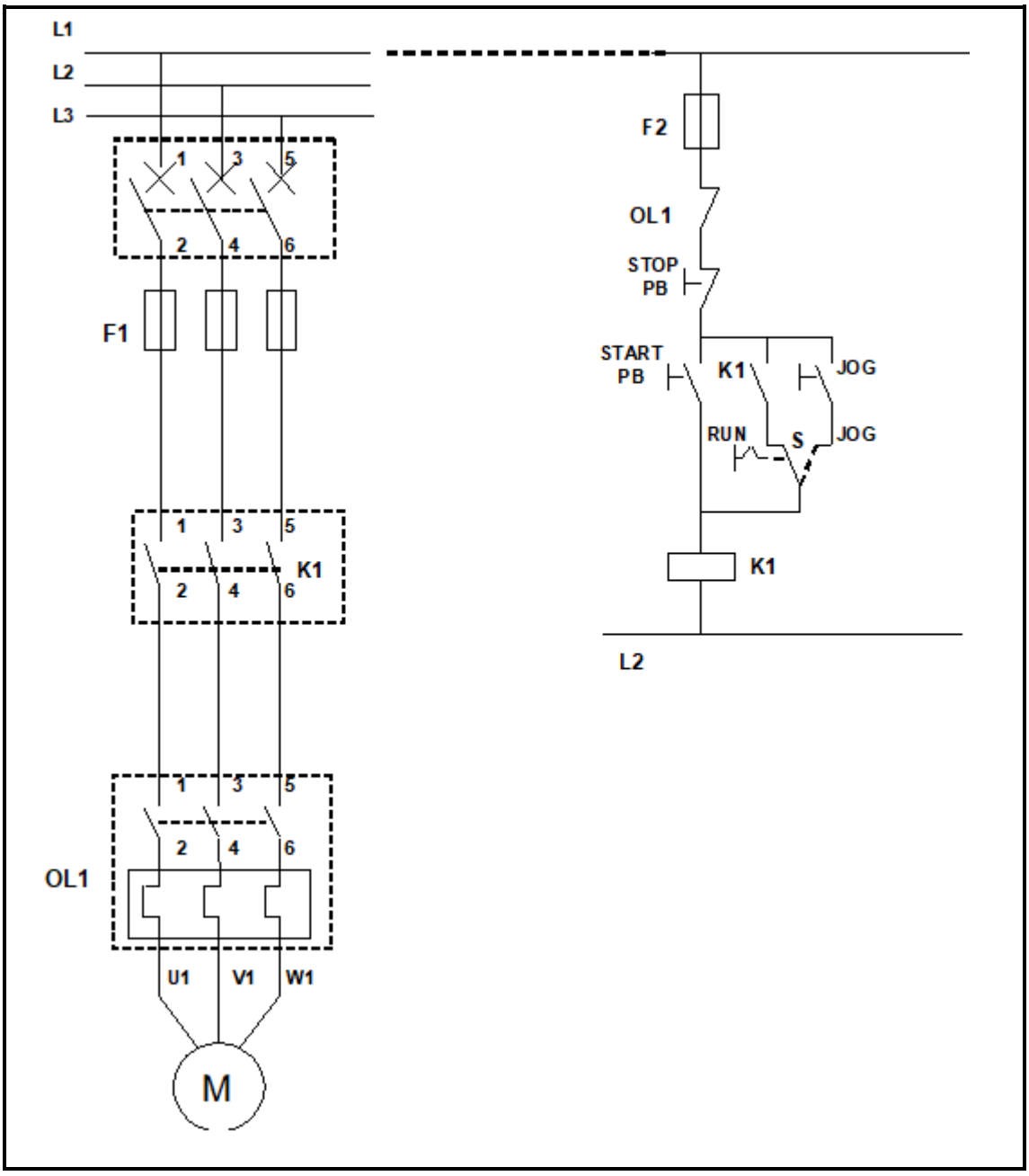

FIGURE 3 (10)

4.3 Explain why it is necessary to use the installation guidelines given in the technical documentation of a PLC operating manual. (4)

4.4 Explain the function of an actuator as a final drive in a PLC control system. (2)

[20]

Copyright reserved

QUESTION 5

5.1 Before commissioning a system, a visual inspection of the entire system must be conducted, including motors, disconnect switches, circuit breakers, controls, load components, control devices such as limit, float or pressure sensors.

List FIVE broadly defined items to put on a checklist to ensure thorough compliance and operation. (5)

5.2 List SIX steps of the SMART approach followed in troubleshooting. (6)

5.3 It has come to your attention that students are forgetting the chuck key in the lathe and starting the lathe with devastating consequences. The lathe has an unmonitored mechanical guard.

5.3.1 Explain how to prevent this problem. (2)

5.3.2 Draw a simple electrical diagram to solve this problem using relay logic and switches. (7)

[20]

TOTAL: 100

Copyright reserved