higher education & training

Department:
Higher Education and Training
REPUBLIC OF SOUTH AFRICA

NATIONAL CERTIFICATE (VOCATIONAL)

ELECTROTECHNOLOGY
NQF LEVEL 4

(12040594)

27 February 2018 (Y-Paper)
13:00–16:00

This question paper consists of 7 pages

Copyright reserved

TIME: 3 HOURS
MARKS: 100

INSTRUCTIONS AND INFORMATION

1. Answer ALL the questions.
2. Read ALL the questions carefully.
3. Number the answers according to the numbering system used in this question paper.
4. Write neatly and legibly.
5. All drawings must be neatly drawn and labelled.

Copyright reserved

QUESTION 1

1.1 Refer to the three-phase motor in FIGURE 1.1.

Name the parts that make up the three-phase motor. Write the numbers (1.1.1–1.1.6) in your ANSWER BOOK and the correct name of the applicable part.

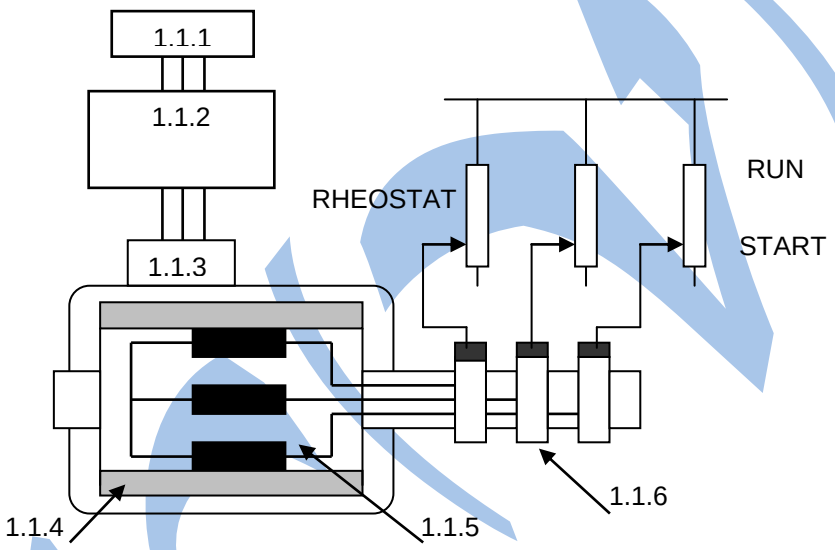

FIGURE 1.1 (6)

1.2 Refer to the three-phase motor in FIGURE 1.1 and give THREE characteristics of a three-phase motor. (3)

1.3 The efficiency of an induction motor is affected by the power losses that occur within the induction motor.

1.3.1 Give THREE losses you consider will reduce the induction motors output power. (3)

1.3.2 A 380 V induction motor has an output power of 5,5 KW. The induction motor has a total power loss of 87 W.

Determine the efficiency of the induction motor. (5)

1.4 Give THREE advantages of a variable speed drives. (3)
[20]

Copyright reserved

QUESTION 2

2.1 Refer to FIGURE 2.1 and answer questions (2.1.1–2.1.4).

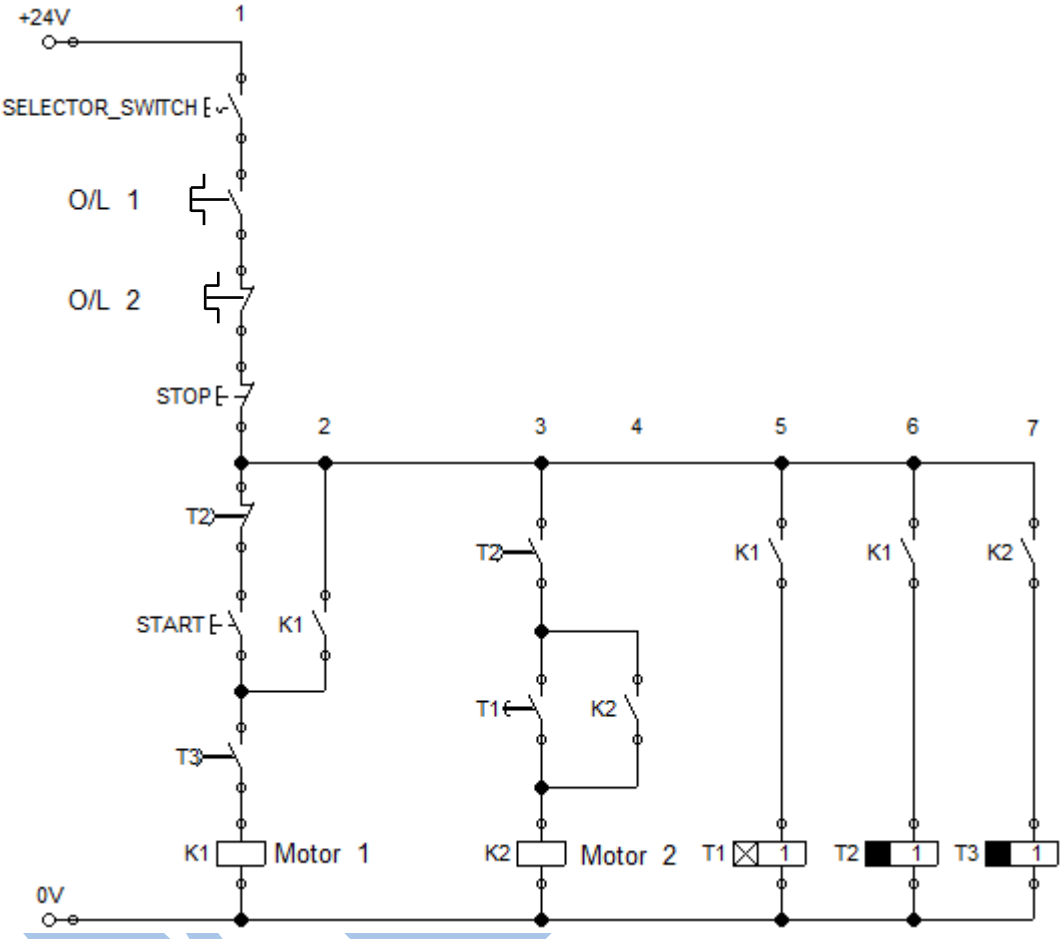

FIGURE 2.1

Example: Question – What timer switches on when contact 2 closes?
Answer – Timer T3 in line 7 switches on when contact 2 in line 7 closes.

2.1.1 What is the first device that must be activated to allow the circuit to operate? (1)

2.1.2 Explain what the electrician has done incorrectly with the wiring of O/L1. (2)

2.1.3 Name the contact that is serving no purpose in the circuit. (2)

2.1.4 Explain the operation of the circuit from the stop pushbutton when the start pushbutton is pressed.

Start your explanation as follows:
When the start push button is pressed, the current will flow through the stop pushbutton … (10)

2.2 Explain the difference between an *electrical interlock* and a *mechanical interlock*.

NOTE: Explain where it is placed and the reason for using it. (4)

2.3 What does the acronym IGBT stand for? (1)
[20]

QUESTION 3

3.1 Analyse TABLE 3.1 and write the number (3.1.1-3.1.5) in your ANSWER BOOK with the applicable answer next to the number.

Material	**What the material will be used for**	**What tools you will use to install the material**
Trunking	To run conductors in them.	Name THREE tools (3.1.1)
(3.1.2)	Strap conductors neatly together	Name ONE tool (3.1.3)
Din rail	(3.1.4)	Name ONE tool (3.1.5)

TABLE 3.1 (7)

3.2 Explain why it is necessary to install an emergency stop switch in a motor control circuit and how it effects the operation of the motor starter using contactors. (5)

3.3 List FOUR types of couplings that can be used on electrical motors. (4)

3.4 List THREE speed control techniques used for variable speed drives. (3)

3.5 Explain what *running torque* is when referring to variable speed drives. (1)
[20]

QUESTION 4

4.1 Refer to FIGURE 4.1 which represents the control circuit of a Star-Delta starter.

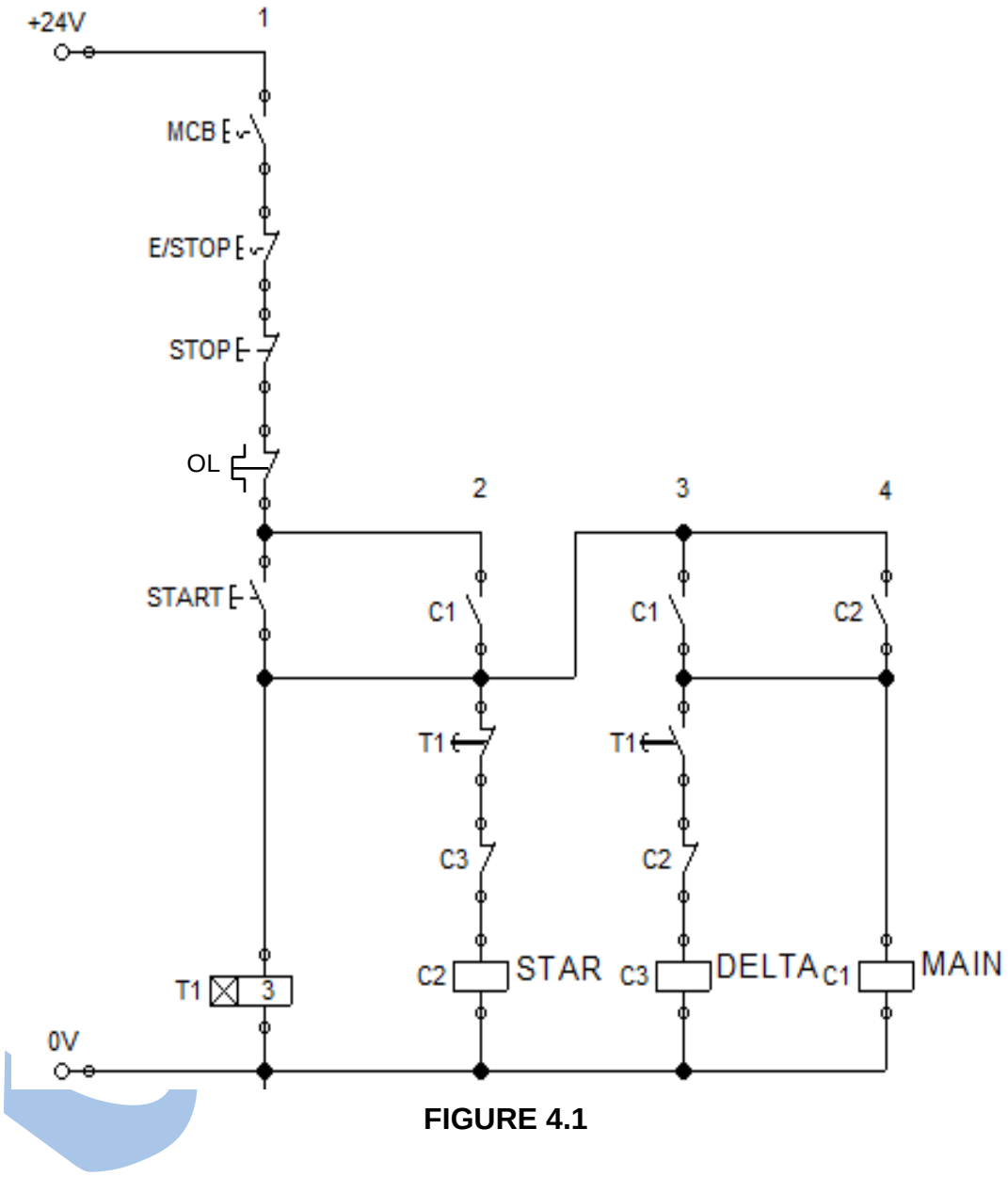

FIGURE 4.1

4.1.1 Convert the hardwired control circuit to a PLC ladder diagram. (10)

4.1.2 Explain the operation of the ladder programme per rung. (6)

4.2 Explain why it is preferable to use the normally closed contacts of an emergency stop switch when wiring it to a PLC. (4)

[20]

QUESTION 5

5.1 Fatigue occurs when a material is subjected to cyclic loading (stretching) and unloading (relaxing) above the materials threshold.

Explain what you will do to prevent *material fatigue* on electric motors and machine parts when you install or repair them. (4)

5.2 You have just noticed a mechatronic colleague lifting a faulty electrical motor by the eyebolt with the base still attached.

Explain why the lifting of the motor with the base is considered as an unsafe act and what the consequences thereof are. (5)

5.3 Electrical motors need to be tested before they are installed and it is good practice to document the readings which can be used for comparisons when future maintenance tests are done.

5.3.1 Explain how to complete an insulation resistance test between the windings of a 380 V three phase induction motor. (6)

5.3.2 Analyse the readings of the resistance test on the windings that was also completed on the same motor. The resistance windings specification is 2,8 Ω+/- 5%.

The winding resistance test results were:

U1-U2 = 2,72 Ω
V1-V2 = 2,76 Ω
W1-W2 = 2,1 Ω

Explain the reason for installing or not installing the motor into a system. (2)

5.4 Give THREE advantages of a maintenance plan in factories. (3)

[20]

TOTAL: 100

Copyright reserved