higher education & training

Department:
Higher Education and Training
REPUBLIC OF SOUTH AFRICA

# MARKING GUIDELINE

## NATIONAL CERTIFICATE (VOCATIONAL)

## ELECTROTECHNOLOGY
## NQF LEVEL 4

## 27 FEBRUARY 2020

**This marking guideline consists of 6 pages.**

Copyright reserved

## QUESTION 1

1.1
- When materials are transported
- When the form of materials is changed (2)

1.2 A delta system is a three-wire system (380 V)
A star system is a four-wire system (220 V or 380 V) (2)

1.3

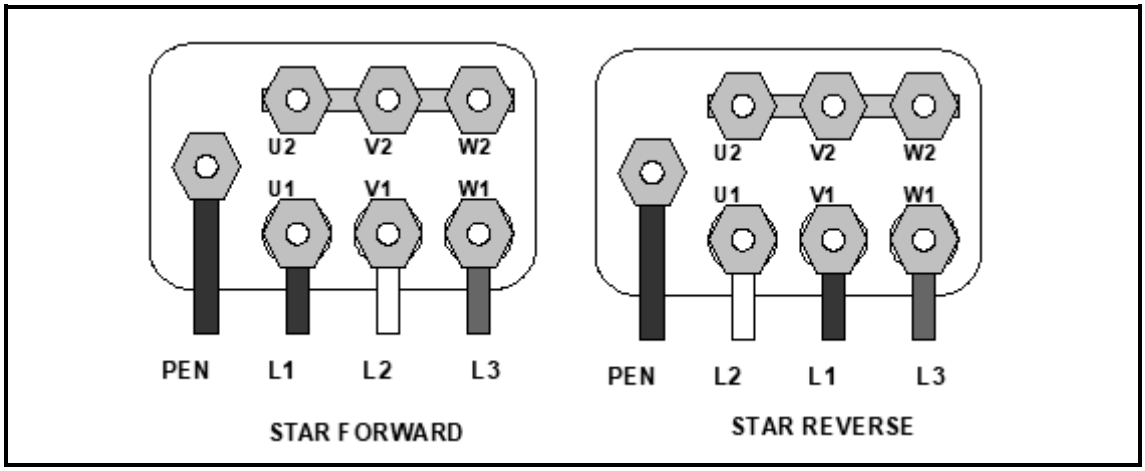


(2 × 3) (6)

1.4 a – Commands✓
b – Status display✓
c – Thermal sensing✓
d – Power interface✓
e – Relay✓
f – 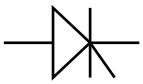 ✓✓
g – 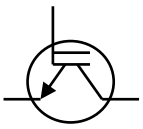 ✓✓
h – M ✓ (10)
**[20]**

## QUESTION 2

2.1
- There are many applications when two or more speeds are required by a three-phase motor also referred to as a Dahlander control circuit. The motor used has an additional set of rotor windings
- with a different winding ratio that is housed in the motor.
- The control circuit switches between the rotor windings that enable the motor to deliver the rated torque at the low or at the high speed.
- The coils are switched by means of control contactors
- that are interlocked so they do not energise the rotor coils at the same time
- and each rotor is protected by its own overload relay.

(Discretion to be used when marking) (6)

2.2

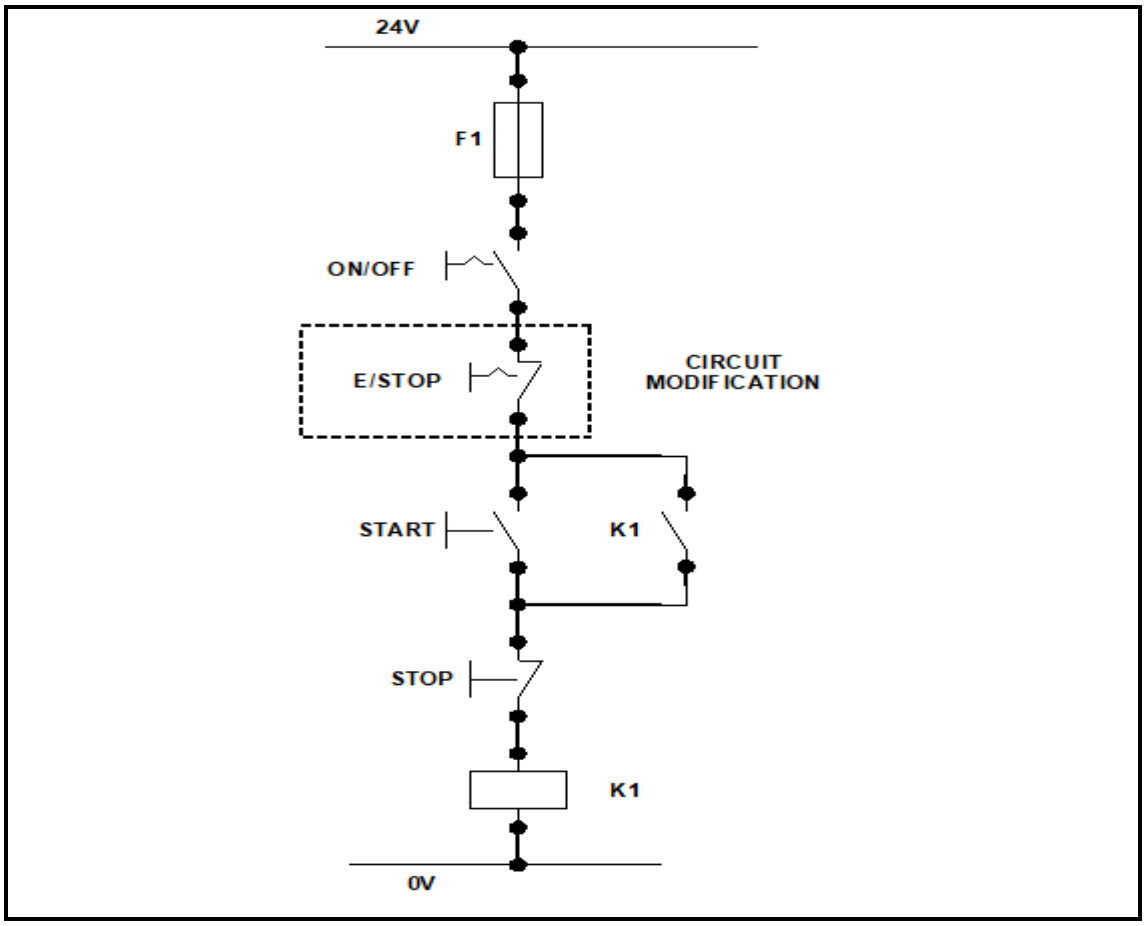


(Discretion to be used when marking)
(ONE mark for each correct component and THREE marks for correct circuit) (10)

2.3 2.3.1 The actuator is the device that controls the turning ON/OFF of the drive✓ while the drive is the device that produces the motion that enables useful work to be done.✓

2.3.2 The overload relay (OL) is used to protect the motor from being put under a strain by sensing thermal change.✓ This is achieved by electronic sensing or a bimetal switching action in conjunction with a contactor.✓

(2 × 2) (4)

**[20]**

## QUESTION 3

3.1

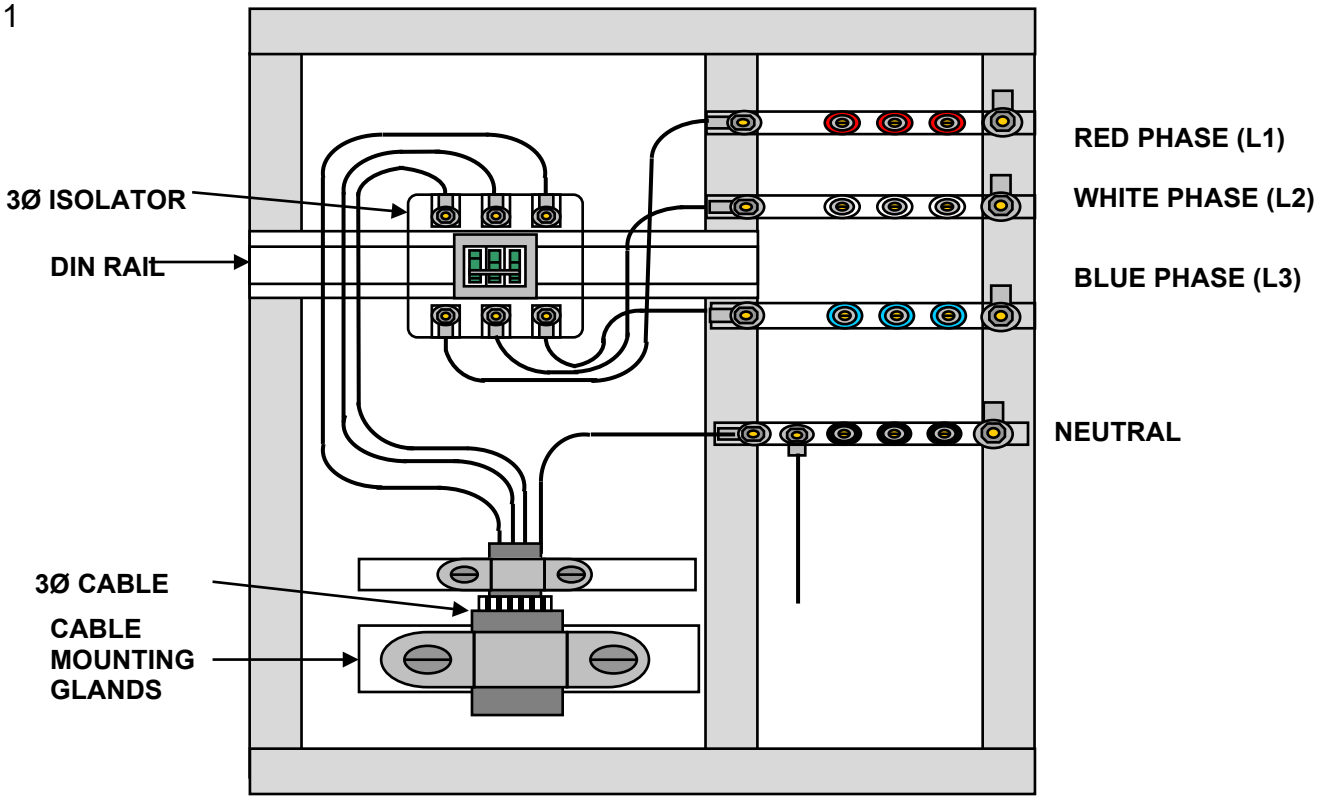


(Discretion to be used when marking) (12)

3.2 It is required by law that all machinery or related mechatronic systems have to have an emergency stop button.✓ This law require that existing machinery used in factories be modified✓ to accommodate this emergency stop requirement. (Discretion to be used when marking) (2)

3.3 The following considerations must be made:

- Checking compatibility of the electric motor
- Supply connection type (lockable)
- Thermal overload protection to the motor (overload)
- Motor cable protection (overcurrent)
- Ground fault protection (earthing)
- Power cables correctly rated
- Control conductors correctly rated
- Control gear correctly rated (Any 6 × 1) (6)

**[20]**

## QUESTION 4

4.1
- Smaller in physical size than a hard-wired solution
- Easier and faster to make changes
- PLC's have integrated diagnostics and override functions
- Diagnostics are centrally available
- Applications can be immediately documented
- Applications can be duplicated faster and less expensively (Any 5 × 1) (5)

4.2

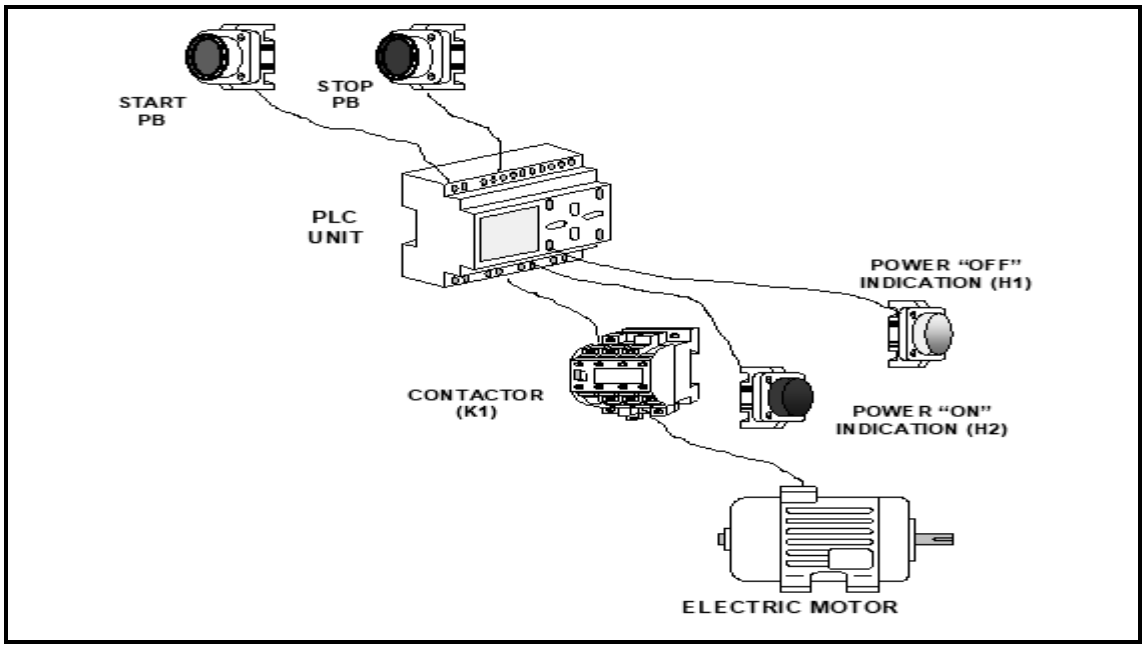


(Discretion to be used when marking) (9)

4.3
- Push buttons connected to the PLC inputs,
- can be used to start and stop a motor connected to a PLC through a motor starter contactor (actuator) connected at the PLC outputs.
- The lamps indicate that the system is on standby mode and when running another lamp, will indicate the running mode.

(Discretion to be used when marking) (3)

4.4
- Converting a ladder diagram originally designed for electromechanical hard-wired systems, to one using solid-state or PLC control, must account for the differences between electromechanical and PLC devices.
- Simply replacing each contact in the relay ladder diagram
- with a corresponding software 'contact', will not always produce the desired logic function or fault detection and response.

(Discretion to be used when marking) (3)

**[20]**

Copyright reserved 

## QUESTION 5

5.1
- Electromagnetic compatibility is a legal requirement for all equipment taken into service.
- Variable speed drives or any other solid state device that uses high switching speeds are described as a source of interference.
- It is natural that all parts which are in an electrical or airborne connection, fall within the power drive system (PDS) and are part of the EMC compliance. (Discretion to be used when marking) (3)

5.2
a – Isolator
b – Power supply
c – Circuit breaker
d – PLC
e – Contactor/Relay
f – Filter
g – Motor
h – Filter
i – Drive controller (9)

5.3
- Shielding is the process of insulating against unwanted electromagnetic emissions
- by connecting to the earth of the installation. (2)

5.4

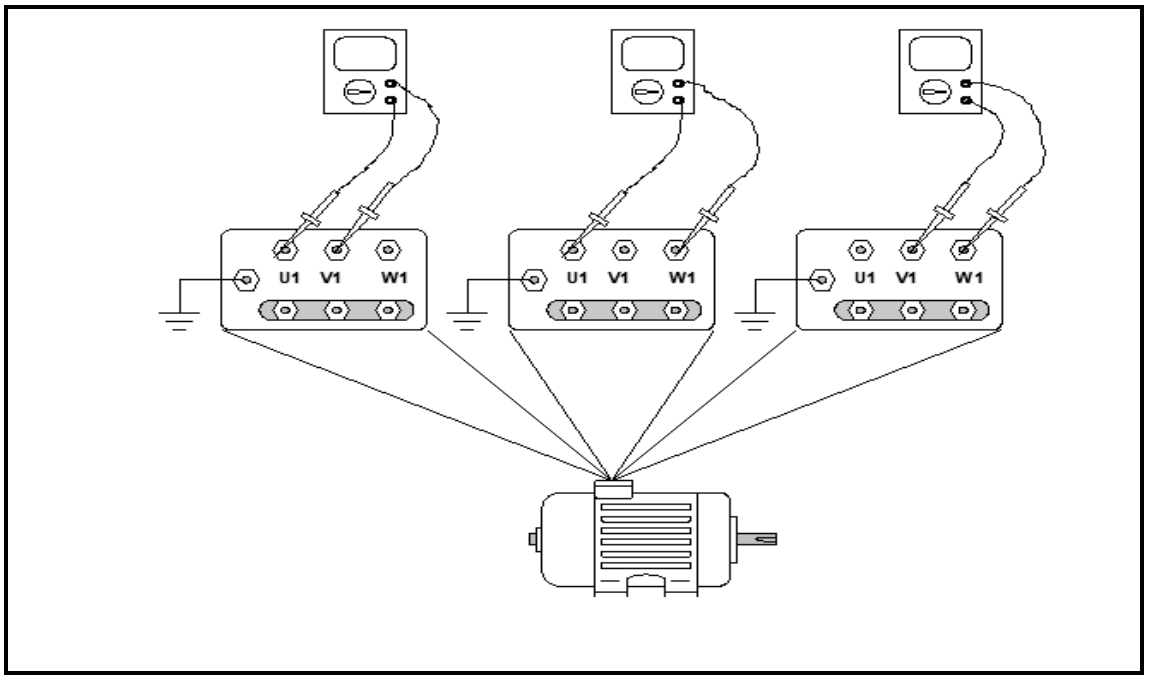


(Discretion to be used when marking) (6)
**[20]**

**TOTAL: 100**

Copyright reserved