higher education & training

Department:
Higher Education and Training
REPUBLIC OF SOUTH AFRICA

NATIONAL CERTIFICATE (VOCATIONAL)

ELECTROTECHNOLOGY
NQF LEVEL 4

(12040594)

3 December 2020 (X-paper)
09:00–12:00

This question paper consists of 7 pages.

259Q1N2003

Copyright reserved

TIME: 3 HOURS
MARKS: 100

INSTRUCTIONS AND INFORMATION

1. Answer all the questions.
2. Read all the questions carefully.
3. Number the answers according to the numbering system used in this question paper.
4. Start each question on a new page.
5. Write neatly and legibly.

Copyright reserved

QUESTION 1

1.1 Briefly explain each of the following terms:

1.1.1 Alternating current (AC)

1.1.2 Induction motor

(2 × 3) (6)

1.2 Three-phase squirrel-cage induction motors are widely used as industrial drives.

1.2.1 Explain the rotor construction of a three-phase squirrel-cage induction motor. (3)

1.2.2 Explain the operating principle of a three-phase squirrel-cage induction motor. (3)

1.3 Make a neat, fully labelled sketch to show how a three-phase load is connected to a three-phase four-wire supply. (2)

1.4 Determine the synchronous speed of a six-pole induction motor that is connected to a 525 V, 60 Hz supply. (2)

1.5 FIGURE 1 represents the nameplate of a motor.

1.5.1: SERIES MOTOR	**FRAME NO:** 122-M
1.5.2: SINGLE	**SER. NO:** 27398
VOLTAGE: 380–400 V	**POWER:** 5 kW
1.5.3: 1 200 r/min	**FREQUENCY:** 50 Hz
CURRENT: 4,52 A	**1.5.4:** 0,85

FIGURE 1

Complete the information on the nameplate by writing only the answer next to the question number (1.5.1–1.5.4) in the ANSWER BOOK. (4 × 1) (4)

[20]

QUESTION 2

2.1 State the function of each of the following electrical elements:

2.1.1 Connectors

2.1.2 Overload relay (OL)

2.1.3 Audible (horn)

2.1.4 Proximity sensors

2.1.5 Isolator

(5 × 1) (5)

2.2

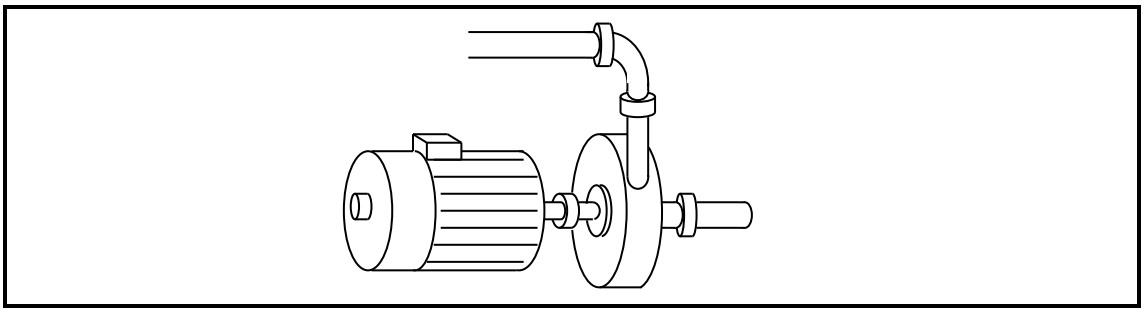

FIGURE 2

Design only a control starter circuit for a three-phase direct-on-line (DOL) induction motor driving a pump as shown in FIGURE 2. The pump must start when a buffer storage tank is a quarter full and stop when the buffer storage tank is full. (4)

2.3 Explain each of the following:

2.3.1 Actuator

2.3.2 Push button

(2 × 2) (4)

2.4 Explain the operating principle of a star-delta starter. (3)

2.5 Differentiate between the emergency stop and emergency off devices as applicable in three-phase control applications. (4)

[20]

QUESTION 3

3.1 List FOUR requirements for successfully installing electrical equipment. (4)

3.2 Show, with the aid of TWO diagrams, the electrical separation of the high-power switchgear and the low-power control gear on a control panel. (4)

3.3 Draw up a plan to ensure the successful removal and replacement of a burnt-out three-phase induction motor. The plan must include the following:

3.3.1 Material and tool list (6)

3.3.2 Procedure to follow when changing the electric motor (6)

[20]

QUESTION 4

4.1 Explain the relationship between *solid-state technology* and the modification process of *hardwired logic-control applications*. (4)

4.2

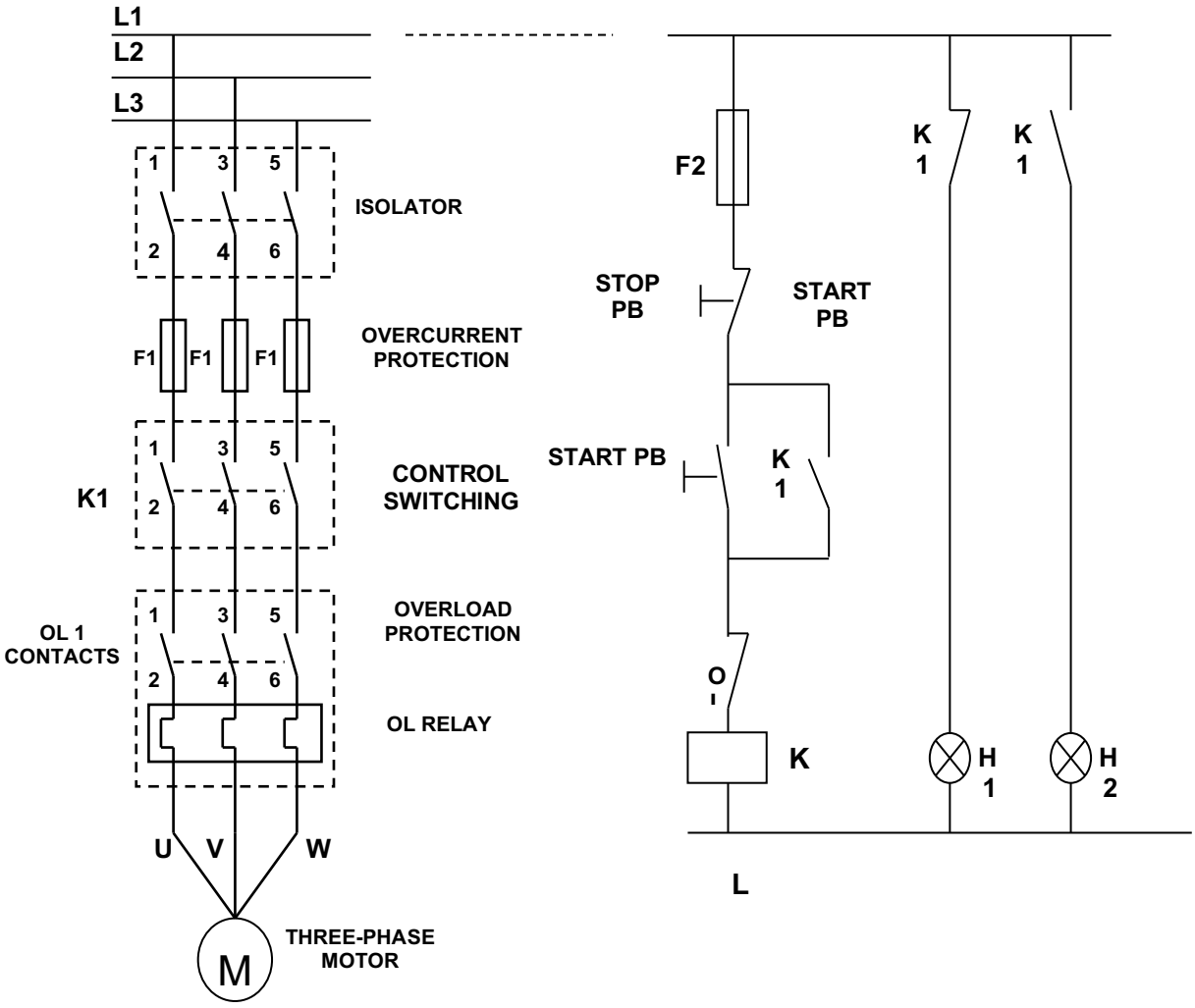

FIGURE 3

Convert the start/stop hardwired circuit shown in FIGURE 3 into a PLC control ladder format. (12)

4.3 List FOUR basic practices used to minimise electrical noise in solid state control. (4)

[20]

QUESTION 5

5.1 State the steps to perform a lockout and tagout (LOTO) procedure while doing maintenance on a three-phase motor installation. Use the following subheadings:

5.1.1 Before shutdown (2)

5.1.2 During shutdown (2)

5.1.3 Lockout and tagout (4)

5.2 List FIVE factors to consider when formulating a maintenance plan. (5)

5.3 Briefly explain the term *system reliability*. (2)

5.4 List FIVE measures to ensure efficient production. (5)
[20]

TOTAL: 100

Copyright reserved