higher education & training

Department:
Higher Education and Training
REPUBLIC OF SOUTH AFRICA

NATIONAL CERTIFICATE (VOCATIONAL)

ELECTROTECHNOLOGY
NQF LEVEL 2

(12040212)

18 November 2019 (Y-Paper)
13:00–16:00

This question paper consists of 8 pages.

Copyright reserved

TIME: 3 HOURS
MARKS: 100

INSTRUCTIONS AND INFORMATION

1. Answer ALL the questions.
2. Read ALL the questions carefully.
3. Number the answers according to the numbering system used in this question paper.
4. ALL drawings must be neat and well balanced.
6. Write neatly and legibly.

Copyright reserved

QUESTION 1

1.1 Matter is defined as anything that occupies space and has mass.

Name the THREE states in which matter can be found. (3)

1.2 In a basic electrical circuit the relationship between the base quantities of voltage, resistance and current is defined by a certain law.

1.2.1 Identify this law. (1)

1.2.2 Define the law named in QUESTION 1.2.1. (3)

1.3 Four resistors are connected as shown in FIGURE 1 below.

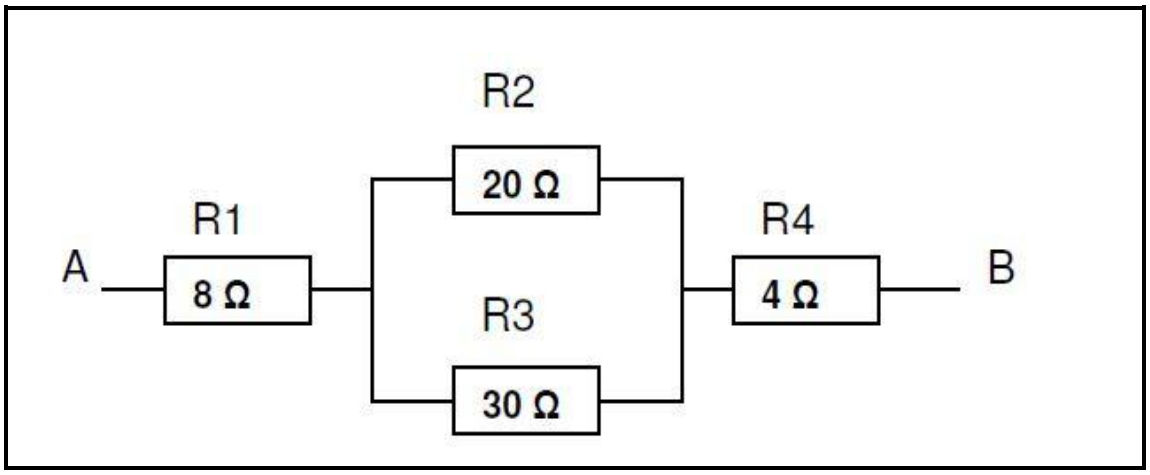

FIGURE 1

1.3.1 Determine the total resistance between point A and point B. (4)

1.3.2 The voltage if a total current of 10 amps flow through the circuit. (2)

1.4 A transformer without any losses is regarded as an … (1)

1.5 A single-phase transformer has a supply voltage of 220 V and a primary current of 10 A. The number of windings on the primary coil is 250 turns and on the secondary coil 50 turns.

Calculate the following:

1.5.1 The turns-ratio

1.5.2 The secondary voltage

1.5.3 The secondary current

Copyright reserved

(3 × 2) (6)
[20]

Copyright reserved

QUESTION 2

IEC symbols are used to represent wiring, components and apparatus in circuit diagrams.

2.1 Complete the table below with the corresponding circuit pictures and circuit symbols in FIGURE 2. Write only the correct letter (A–H) next to the question number (2.1.1–2.1.8) in the ANSWER BOOK.

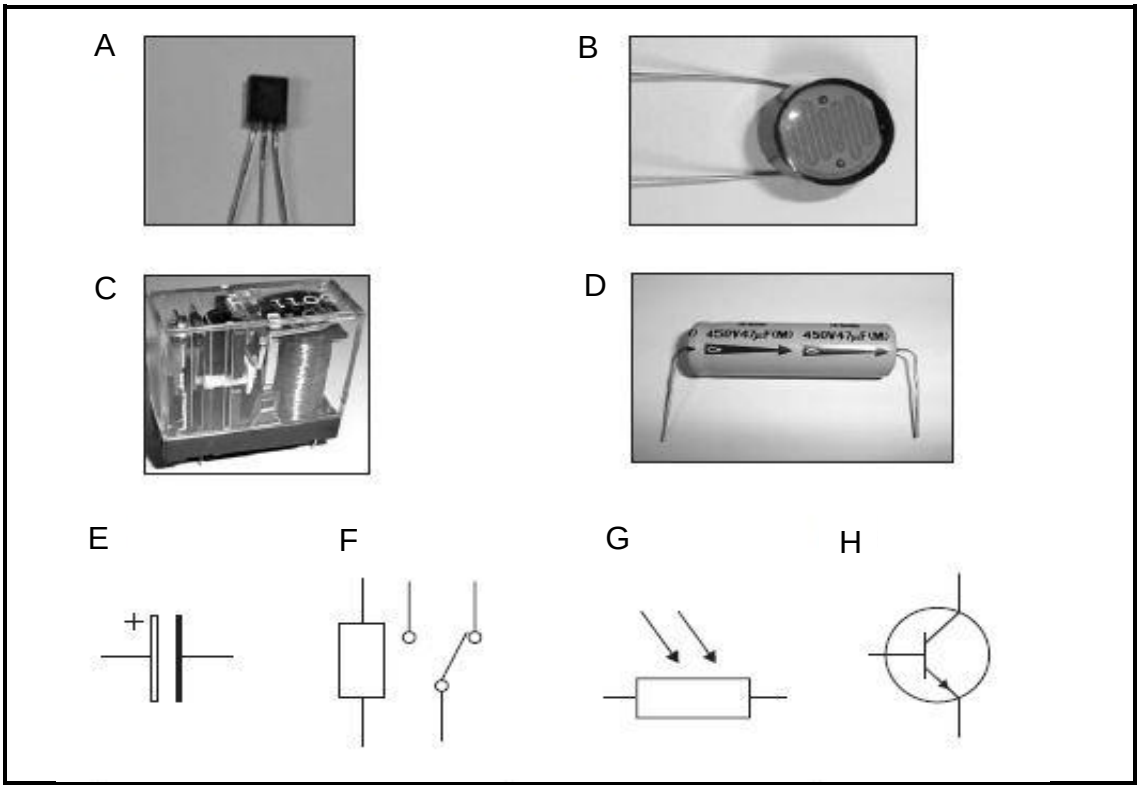

FIGURE 2

COMPONENT	PICTURE	SYMBOL
Relay	2.1.1	2.1.2
Electrolytic capacitor	2.1.3	2.1.4
Transistor	2.1.5	2.1.6
Light dependent resistor	2.1.7	2.1.8

(8)

2.2 2.2.1 Name the THREE most common types of electrical diagrams a mechatronic person will come across. (3)

2.2.2 Give an illustrated example of each answer in QUESTION 2.2.1 (3 × 2) (6)

Copyright reserved

2.3 Refer to the materials list given in TABLE 1 and answer the questions.

MATERIALS LIST			
ITEMS	**DESCRIPTION**	**SYMBOL**	**QUANTITY**
1	Distribution board/Main supply		1
2	Lamp	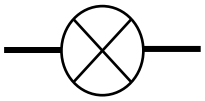	1
3	Two-way switches	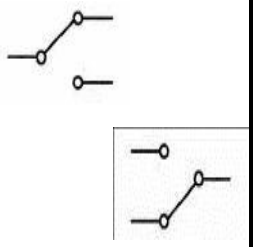	2
4	Circuit breaker	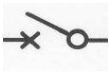	1

TABLE 1

2.3.1 Design a wiring diagram for a two-way switching lighting circuit using all the components in TABLE 1. (6)

2.3.2 What size circuit breaker is required for the circuit? (1)

2.3.3 What size conductors are needed for the circuit? (1)

[25]

Copyright reserved

QUESTION 3

3.1 Analyse the circuit in FIGURE 3.1 below and answer the questions.

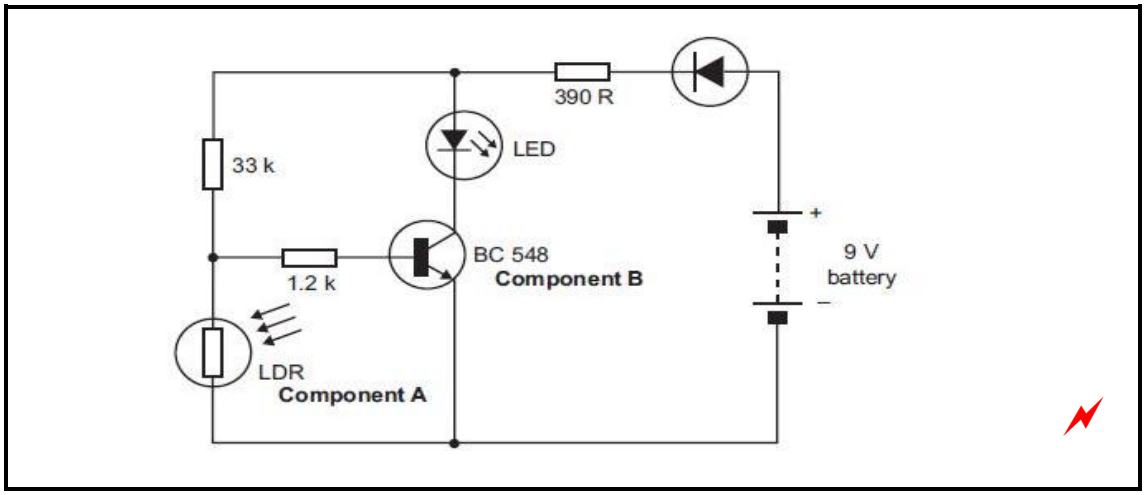

FIGURE 3.1

3.1.1 Component A is an LDR.

What do the letters LDR stand for? (1)

3.1.2 For which practical application could this circuit be used? (1)

3.1.3 Identify component B. (1)

3.1.4 Identify the input condition for the LDR to turn ON the LED. (1)

3.1.5 Describe in detail, the sequence of circuit functions that would turn on the LED. (3)

3.2 Soldering is important in the constructing of an electronic circuit. This also ensures good connection between the components. Refer to FIGURE 3.2 below and answer the questions.

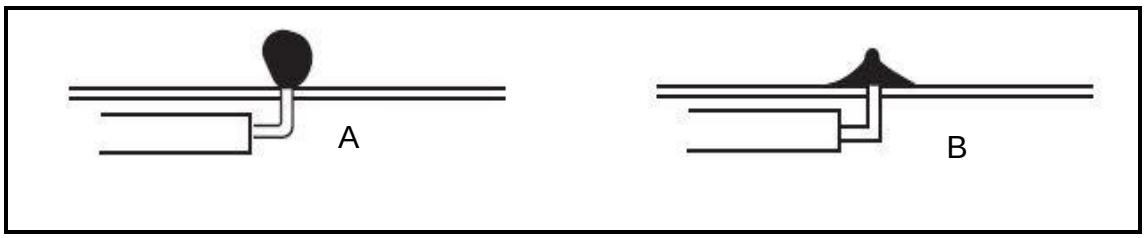

FIGURE 3.2

3.2.1 Identify which solder joint shown above is a bad solder joint and give TWO reasons for it. (3)

3.2.2 Describe TWO features of a good solder joint. (2)

3.3 A small power diode is shown in FIGURE 3.3.

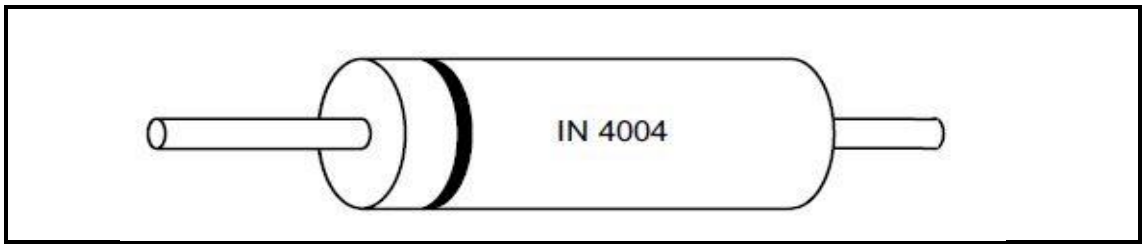

FIGURE 3.3

3.3.1 Redraw FIGURE 3.3 in your answer book and indicate the direction of conventional current flow through the diode as well as where the anode and cathode is.

3.3.2 Draw the matching standard symbol for a diode with the same orientation.

(2 × 3) (6)

3.4 As a mechatronic person you are assigned a task by your supervisor to plan an electronic project.

Identify SEVEN things that should be looked at as part of the planning stage. (7)
[25]

QUESTION 4

4.1 Basic electrical faults can be classified as follows:

Short circuit and open circuit

Give a brief description of each one of these faults. (2 × 2) (4)

4.2 Analyse the circuit in FIGURE 4 and answer the questions.

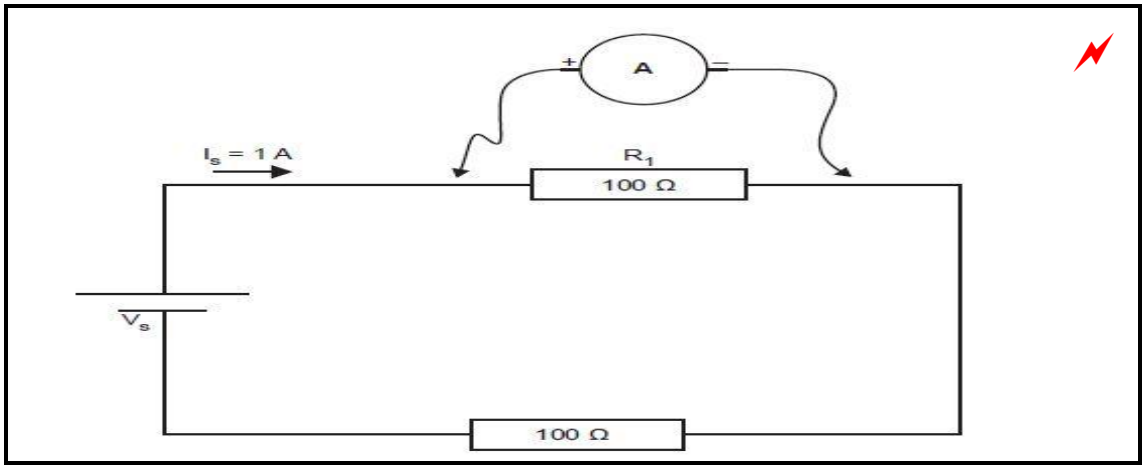

FIGURE 4

4.2.1 In the circuit above, the ammeter is to be connected to each side of resistor R1. The ammeter range is selected to 10 A.

When connected, what will the reading on the ammeter be?

A 0 A
B 0,5 A
C 1 A
D 2 A (1)

4.2.2 Give a brief motivation for your answer in QUESTION 4.2.1. (2)

4.2.3 The ammeter is replaced with a voltmeter and connected across resistor R1.

When connected, what will the reading on the voltmeter be?

A $= V_s$

B $\frac{1}{2}V_s$

C $2 \times V_s$ (1)

4.2.4 Give a brief motivation for the answer in QUESTION 4.2.3. (2)

4.3 Draw a block diagram of a five-step troubleshooting approach with regard to faultfinding. (5)

4.4 4.4.1 Identify the instrument you will use to test a diode. (1)

4.4.2 Explain how the test in QUESTION 4.4.1. (4)
[20]

QUESTION 5

5.1 Mr. Wright had an accident at his place of work. This has to be reported in terms of the Compensation for Occupational Injuries and Diseases Act.

Give FIVE steps Mr. Wright has to follow to report the accident. (5)

5.2 Define the following terms:

5.2.1 Planning (2)

5.2.2 Time frame (1)

5.2.3 Time management (2)
[10]

TOTAL: 100

Copyright reserved