higher education & training

Department:
Higher Education and Training
REPUBLIC OF SOUTH AFRICA

NATIONAL CERTIFICATE (VOCATIONAL)

ELECTROTECHNOLOGY
NQF LEVEL 2

(12040212)

8 November 2018 (X-Paper)
09:00–12:00

This question paper consists of 8 pages and 1 answer sheet.

Copyright reserved

TIME: 3 HOURS
MARKS: 100

INSTRUCTIONS AND INFORMATION

1. Answer ALL the questions.
2. Read ALL the questions carefully.
3. Number the answers according to the numbering system used in this question paper.
4. Calculations must be rounded off to the third decimal point.
5. ANSWER SHEET: The Fault Report/Job Card must be removed from the question paper and completed. The Fault Report/Job must be put into your ANSWER BOOK so it can be marked.
6. Write neatly and legibly.

Copyright reserved

QUESTION 1

1.1 FIGURE 1.1 below indicates four incandescent lamps with different filament resistance values connected to a 12 V supply. Analyse FIGURE 1.1 and answer the questions.

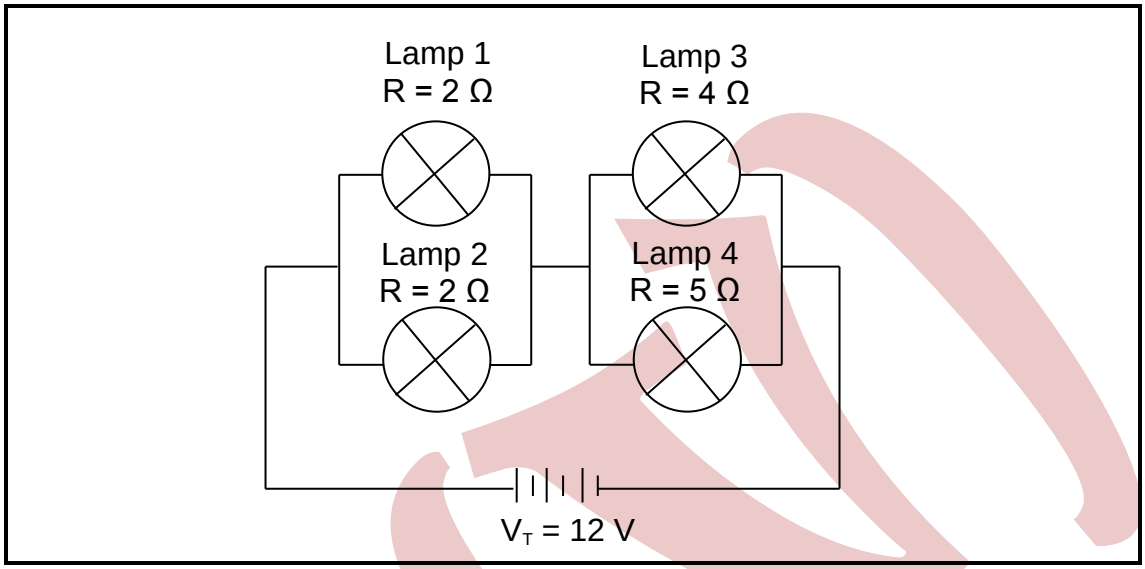

FIGURE 1.1

1.1.1 Refer to the way all the lamps are connected to each other and name the type of circuit connection. (1)

1.1.2 Calculate the total resistance of the circuit. (6)

1.1.3 Calculate the total current flowing through the circuit. (2)

1.1.4 Calculate the total power drawn by the circuit. (2)

1.2 State Ohm's law. (3)

1.3 Give TWO factors that will increase the amount of inductance of the coil. (2)

1.4 A transformer is a device that transfers electrical energy from one circuit to another by electromagnetic induction.

1.4.1 Draw a fully labeled simple transformer diagram in your ANSWER BOOK. (3)

1.4.2 Draw the IEC symbols for the transformer you drew for QUESTION 1.4.1 (1)

[20]

Copyright reserved

QUESTION 2

2.1 Refer to FIGURE 2.1 below and answer the questions.

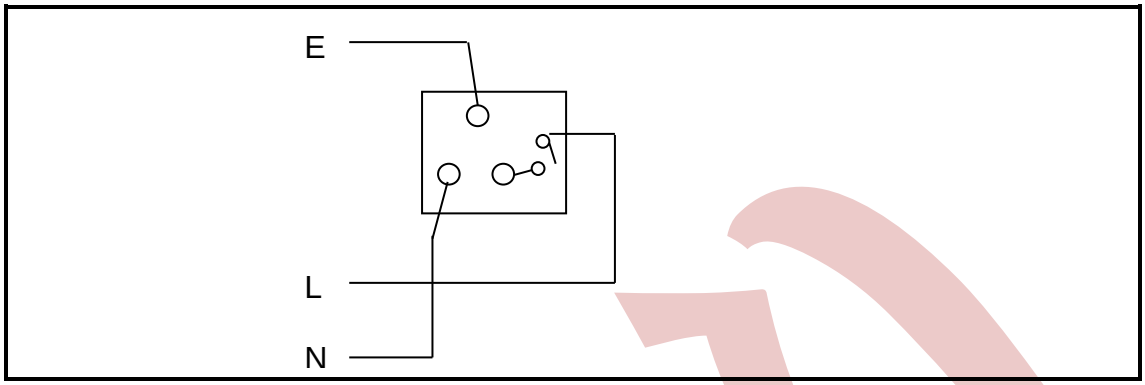

FIGURE 2.1

2.1.1 Redraw FIGURE 2.1 above in your ANSWER BOOK and show how you will connect a second socket outlet to the wiring diagram of FIGURE 2.1. (3)

2.1.2 You saw your friend using a 1,5 mm^2 cross-sectional area conductor while doing the installation shown in FIGURE 2.1.

Explain in detail why using a 1,5 mm^2 cross-sectional area conductor is not acceptable according to SANS 10142. (3)

2.1.3 Explain why when pushing the test button on an earth leakage unit it does not mean that the socket outlet earth system is wired correctly. (3)

2.1.4 Name the instrument used to test if the socket outlets are earthed correctly. NOTE: Do not mention a multimeter. (1)

2.2 Refer to FIGURE 2.2 and draw a neat, labelled wiring diagram for an electrician to refer to when wiring the light installation. The switches and lamps are of the metal type. The distribution board must be included in the circuit diagram.

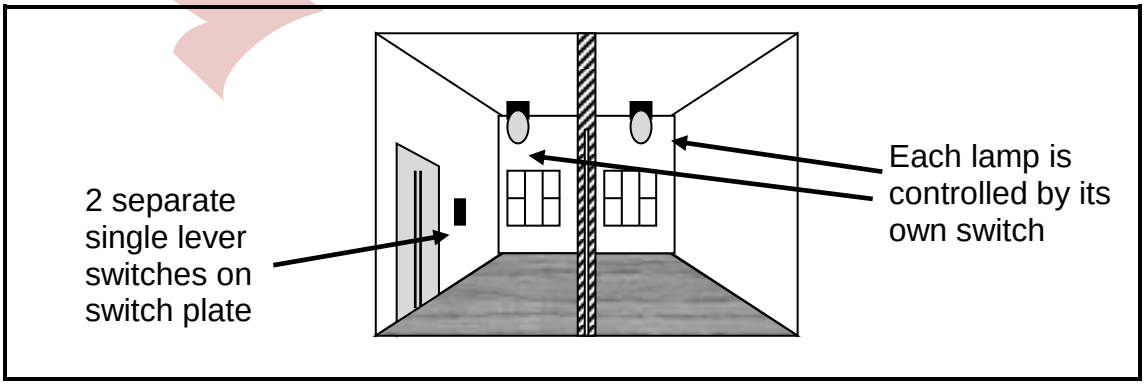

FIGURE 2.2 (7)

2.3 You have been asked to install an electrical metal panel that is going to house a standby battery supply for lighting.

2.3.1 Identify the tool that you will use to make the metal panel vertically and horizontally straight.

2.3.2 Identify the tool that you will use to make sure the bottom of the metal panel is 1,5 m above the floor.

(2 × 1) (2)

2.4 Explain the procedure you will follow, naming tools and power tools you will use to fit a 22 mm red indication lamp in the centre of a metal door of a control panel 200 × 200 × 100 mm.

Note: The indication lamp is not to be fitted or wired. (6)

[25]

QUESTION 3

3.1 Your supervisor has given you a task to design and build an electronic circuit that will switch a red LED on when natural light in a room starts to fade. You need to draw up a plan and work systematically to complete the task.

Write down SIX steps to complete the task. (6)

3.2 Refer to FIGURE 3.1 below and answer questions (3.2.1–3.2.5) in the ANSWER BOOK.

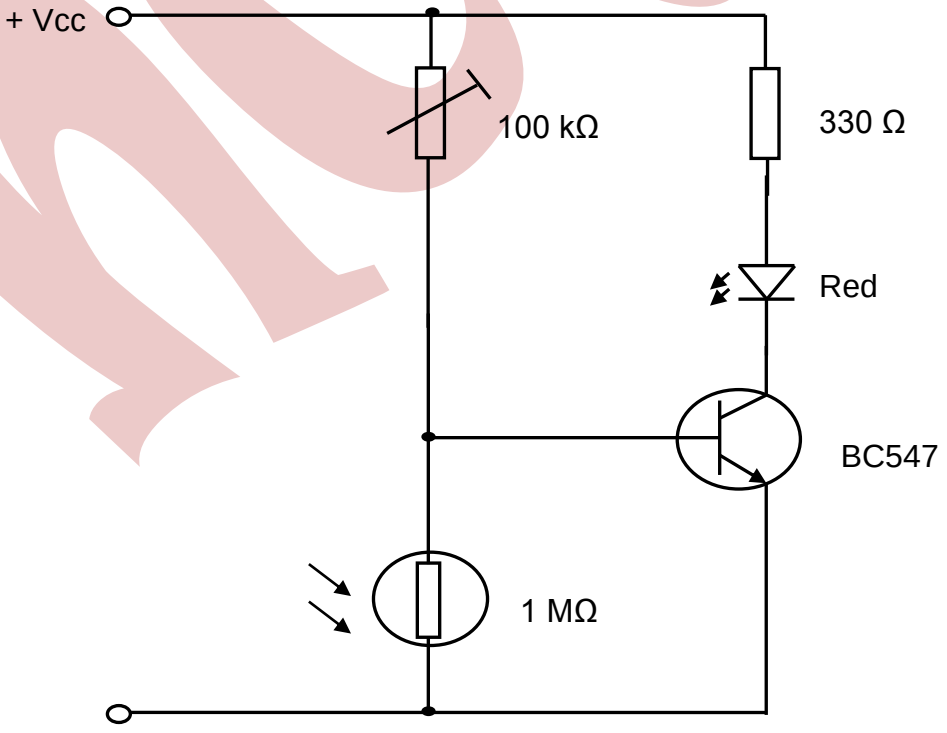

Fading light indicator

FIGURE 3.1

3.2.1 Identify the 1 MΩ component. (1)

3.2.2 Explain the operation of the 1 MΩ component. (2)

3.2.3 Identify the 100 kΩ component. (1)

3.2.4 Explain how you will set the100 kΩ component to a value of 70 kΩ. (4)

3.2.5 Identify the type of transistor BC547 is by referring to the emitter. (1)

3.2.6 Refer to FIGRE 3.1 and explain the operation of the fading light indicator. (4)

3.3 Refer to TABLE 3.1 and identify the carried-out test to match the correct symbol/position that the multimeters selector will be positioned to complete the test.

Write only the correct letter (A–F) next to the question numbers (3.3.1–3.3.6) in your ANSWER BOOK.

	Carried out test	**Symbol/position that the multimeters selector will be positioned to complete the test**	
3.3.1	Measure a battery supply	AC – V	A
3.3.2	Test a diode	DC – V	B
3.3.3	Measure the supply to a transformer	Ω	C
3.3.4	Continuity test	A	D
3.3.5	Measure the total current flowing through a circuit		E
3.3.6	Measure a resistance value	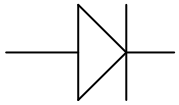	F

(6 × 1) (6)

TABLE 3.1

[25]

QUESTION 4

4.1 Give THREE types of maintenance procedures. (3)

4.2 Give THREE types of faults that can occur when troubleshooting conductors. (3)

4.3 To understand troubleshooting you need to know current paths through electrical circuits and voltage drops throughout the circuit.

Refer to FIGURE 4.1 below and answer questions (4.3.1–4.3.6) in the ANSWER BOOK.

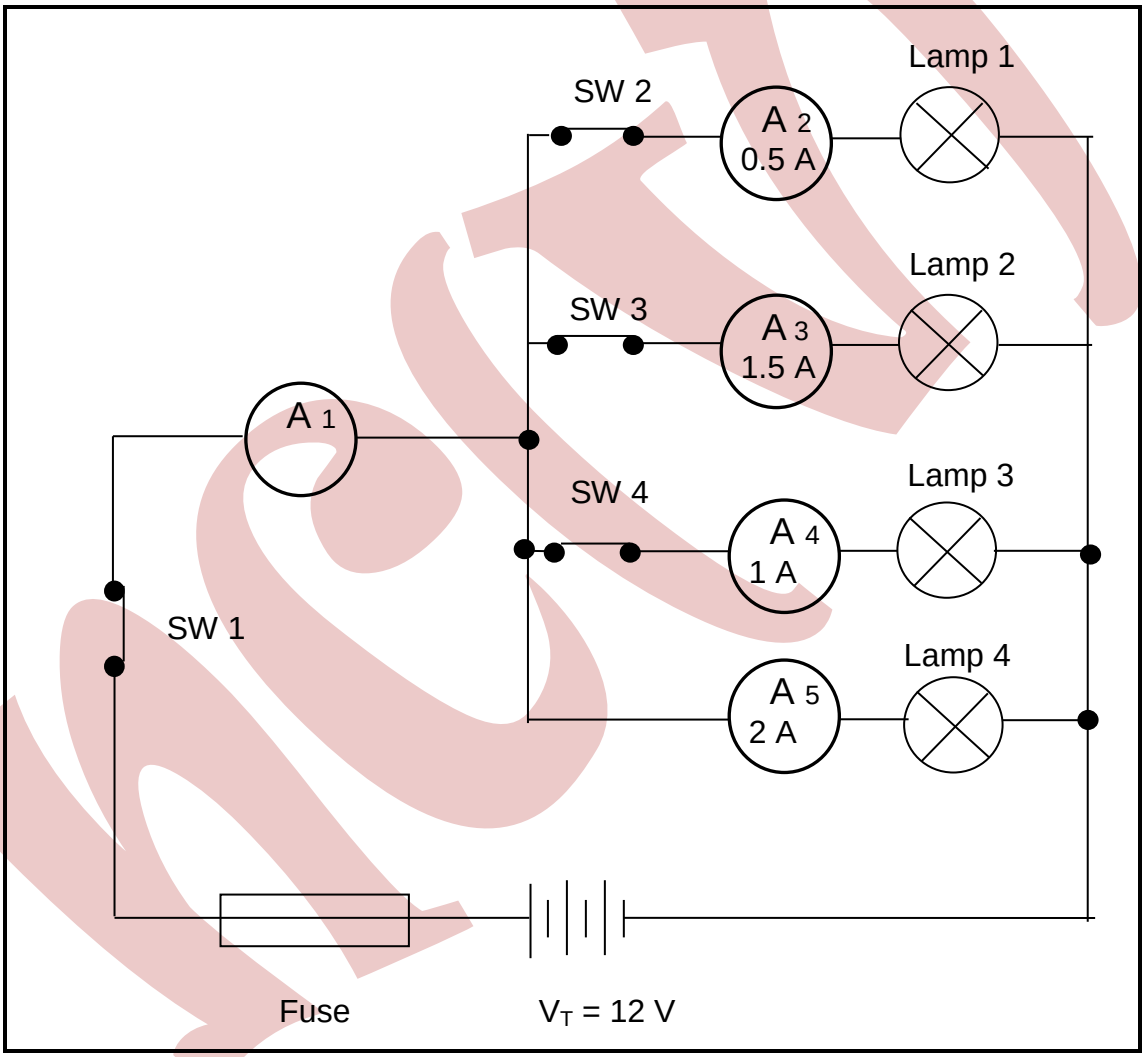

FIGURE 4.1

4.3.1 What current value will be displayed on ampére meter 1? (2)

4.3.2 When ampére meter 1 is displaying 3,5A name the lamp that is faulty. (2)

4.3.3 Identify ONE faulty lamp and a COMBINATION of TWO faulty lamps that will cause A1 to display 3A. (2)

Copyright reserved

4.3.4 What current value will be displayed on ampére meter 1 when switch 2, switch 3 and switch 4 are open? (2)

4.3.5 Explain TWO faults that will cause lamp 4 to be off when all the switches are in the closed position. (4)

4.3.6 Explain where you will put the leads of a multimeter to measure the voltage of the lamps that are connected in parallel. (2)

[20]

QUESTION 5

5.1 Explain why it is important to complete a fault report. (3)

5.2 Read the scenario below and refer to the ANSWER SHEET (attached) to complete the Fault Report/Job Card. Hand it in with your ANSWER BOOK.

Miss B Mandla, a mechatronics employee was asked by her supervisor, Mr R Peters to repair a conveyor belt starter B1/CL3 as it had just stopped working on the 08-11-2017 at 09:45. It was a breakdown and was treated as an emergency repair as the production of chocolates had stopped.

Conveyor belt B1/CL3 is located in building number 1, chocolate line 3. Miss Mandla began fault finding on the electrical motor starter at 09:45. She found that when the start button was pressed, the motor contactor did not energise. The supply to the panel was tested and it was found that the panel was receiving power.

The control circuit was tested and it was found that when the start button was pressed the motor contactor did receive power to the contactors coil but it did not energise. She had suspected that the contactors coil was open circuited because last week she had the same problem on B2/CL1 with the same make of contactor – ELT Contactors.

Miss Mandla tested the contactor's coil and found it to be open circuited so she replaced the motor contactor with another make – PWR Contactor (380 VAC – 4 × N/O – 10A) which she considered to be of a higher quality.

Miss Mandla also checked the circuit protection, the start/stop/emergency stop/overloads, connections, earth and safety covers. She cleaned the area around the motor starter. She was back in the workshop at 11:45 where she completed the fault report. (7)

[10]

TOTAL: 100

Copyright reserved

QUESTION 5.2

ANSWER SHEET

EXAMINATION NUMBER: | | | | | | | | | | | | | |

CENTRE NUMBER: | | | | | | | | | | | |

Fault Report / Job Card

LOCATION	**SUPERVISOR**	**MECHATRONIC EMPLOYEE**
	Mr R Peters	

EQUIPMENT WORKED ON →	

BREAK DOWN		**MAINTENANCE**		**CHECKED** *Mark applicable block with a X*

PARTS USED, REPAIRS DONE, REMARKS		
	Circuit protection correct	
	Start/stop/emergency stop/ overloads	
	Connections	
	Earth connection	
	Safety covers in place	
	Cleaned motor/machinery	
	Cleaned area	
	DATE WORK STARTED	
	TIME STARTED	
	TIME COMPLETED	
	TOTAL TIME	

SIGNED BY SUPERVISOR	**MR R PETERS**
DATE	_____

(7)

DETACH AND HAND IT IN WITH THE ANSWER BOOK.

Copyright reserved