higher education & training

Department:
Higher Education and Training
REPUBLIC OF SOUTH AFRICA

NATIONAL CERTIFICATE (VOCATIONAL)

ELECTROTECHNOLOGY
NQF LEVEL 2

(12040212)

27 February 2020 (Y-paper)
13:00–16:00

This question paper consists of 8 pages.

101Q1S2027

Copyright reserved

TIME: 3 HOURS
MARKS: 100

INSTRUCTIONS AND INFORMATION

1. Answer all the questions.
2. Read all the questions carefully.
3. Number the answers according to the numbering system used in this question paper.
4. All drawings must be neat and well balanced.
5. Clearly cross out all work you do not want to be marked.
6. Write neatly and legibly.

Copyright reserved

QUESTION 1

1.1 Define *Ohm's law*. (3)

1.2 Choose a description from COLUMN B that matches a term in COLUMN A. Write only the letter (A–E) next to the question number (1.2.1–1.2.5) in the ANSWER BOOK.

COLUMN A		COLUMN B	
1.2.1	Matter	A	smallest particle of a compound that has all the properties of the compound
1.2.2	Atom	B	substance made of only one type of atom and cannot be broken down
1.2.3	Element	C	anything that occupies space
1.2.4	Compound	D	smallest particle of a chemical element
1.2.5	Molecule	E	combination of two or more elements

(5 × 1) (5)

1.3 Determine the time required to generate 225 kJ of heat energy when a current of 5 A flows through the element of an electric kettle. The element has a resistance of 44 Ω. (4)

1.4 A resistor of 22 Ω, an inductor of 50 mH and a capacitor of 150 µF are connected in series. This circuit is connected to a 220 V, 50 Hz supply.

1.4.1 Draw the circuit diagram of this combination. (2)

1.4.2 Calculate the inductive reactance. (2)

1.4.3 Calculate the capacitive reactance. (2)

1.4.4 Calculate the impedance of the circuit. (2)

[20]

QUESTION 2

2.1

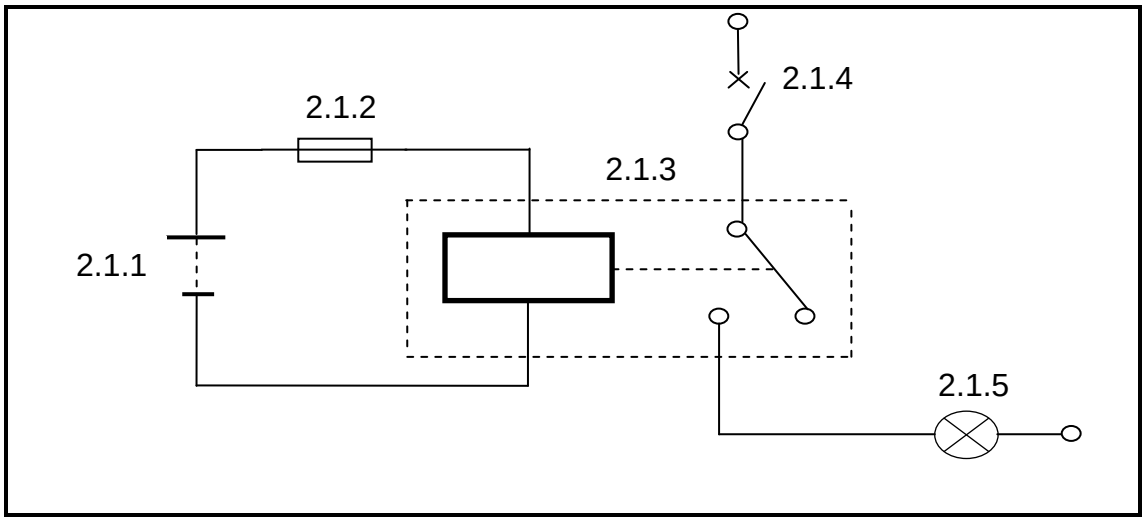

FIGURE 1

Analyse the circuit in FIGURE 1 and identify the symbols by writing only the name of the IEC symbol next to the question number (2.1.1–2.1.5) in the ANSWER BOOK. (5 × 1) (5)

2.2 Briefly explain the operation of the circuit in QUESTION 2.1. (4)

2.3 2.3.1 Name the component you will add to the circuit in QUESTION 2.1 for the relay to control the lamp. (1)

2.3.2 Explain where in the circuit you will place this component. (1)

2.4 Define the term *earthing*. (2)

2.5 Your supervisor asks you to install a geyser in the workshop. From the name plate on the geyser the following information is gathered:

Voltage: 220 V
Frequency: 50 Hz
Element rating: 3 kW

2.5.1 Calculate which size circuit breaker will be needed to protect the circuit. (3)

2.5.2 Name FOUR variables to consider when selecting a new cable for this installation. (4)

2.6 Briefly explain the operation principle of an earth-leakage device. (5)

[25]

Copyright reserved

QUESTION 3

3.1

	Band colours				Resistance	Tolerance
Resistor	**First**	**Second**	**Third**	**Fourth**		
3.1.1					1 kΩ	10%
3.1.2					8,2 kΩ	5%
3.1.3					100 kΩ	20%
3.1.4					6,8 MΩ	5%
3.1.5	white	brown	yellow	gold		
3.1.6	red	violet	brown	silver		

Complete the given table by identifying the colour code or value of the resistors. Write only the colours and values next to the question number (3.1.1–3.1.6) in the ANSWER BOOK. (6 × 1) (6)

3.2 The four stages of a DC power supply are represented as a block diagram in FIGURE 2.

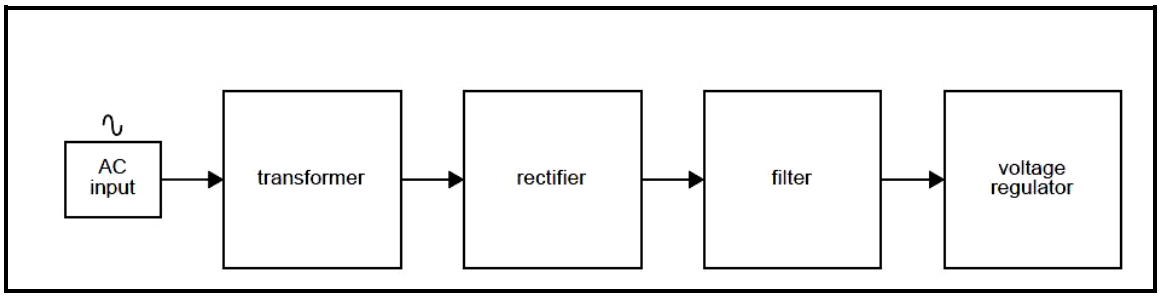

FIGURE 2

Explain the function of each of the following components of the circuit:

3.2.1 Transformer

3.2.2 Rectifier

3.2.3 Filter

3.2.4 Voltage regulator

(4 × 2) (8)

3.3 Name THREE basic tools needed to replace components on a circuit board. (3)

Copyright reserved

3.4 FIGURE 3 shows a dual-LED flashing circuit.

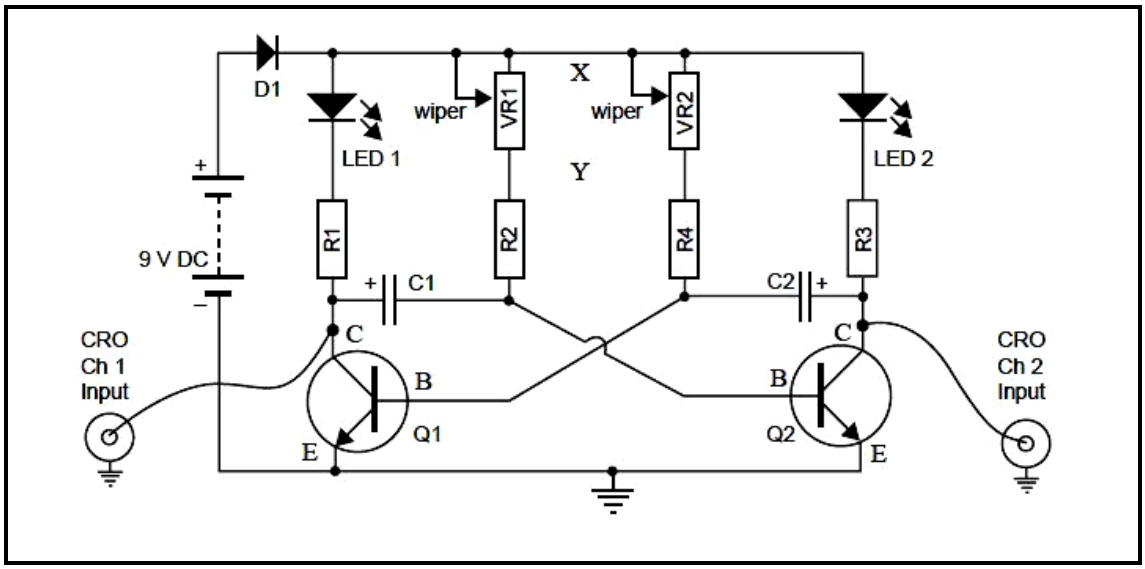

FIGURE 3

Redraw the table below in the ANSWER BOOK with the same headings and complete the materials as per the example.

ITEM NR	DESCRIPTION	QUANTITY
1	CRO input sockets	2

(8)
[25]

QUESTION 4

4.1 To ensure that equipment or machinery in a workplace remain in good working order, one should follow a maintenance procedure which can be subdivided as follows:

- Preventive maintenance
- Corrective maintenance
- Predictive maintenance

Explain each of the maintenance subdivisions. (3 × 2) (6)

4.2 Analyse the circuit in FIGURE 4 and answer the questions.

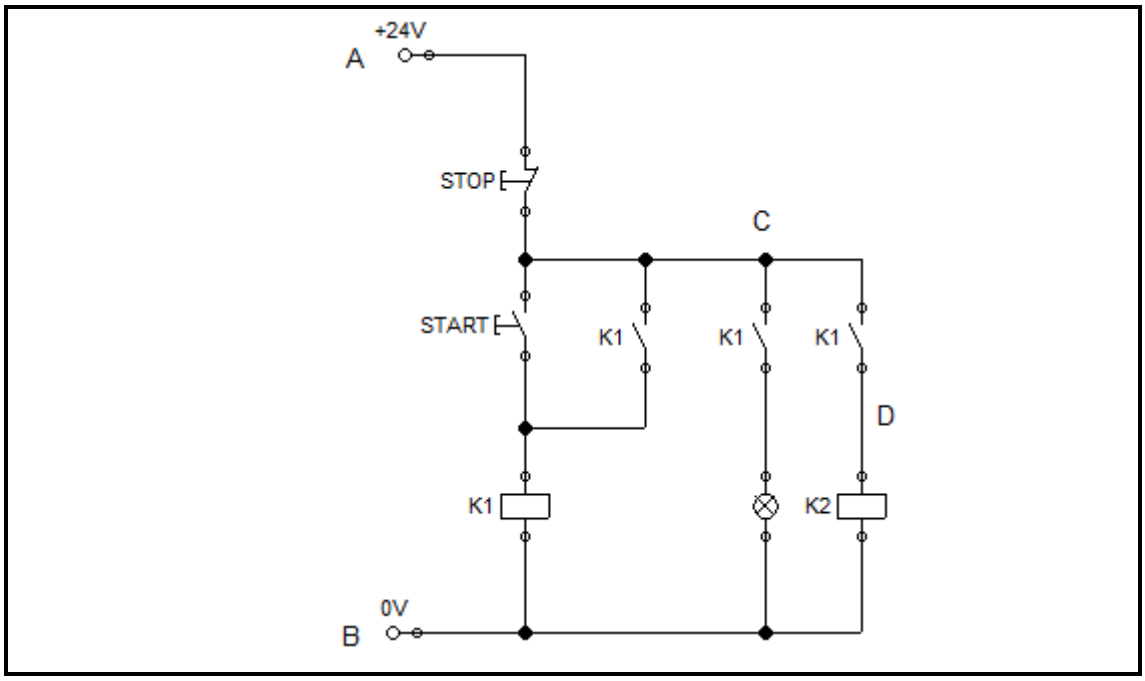

FIGURE 4

4.2.1 Across which points must one measure to check if the circuit has a supply voltage? (1)

4.2.2 What will the voltage be when measuring across points C and B? (1)

4.2.3 What will the reading be when measuring across points D and B? Give a reason for the answer. (2)

4.2.4 Give FOUR reasons why K2 will not energise when the circuit is activated. (4)

4.3 Briefly explain how to check the coil of a relay. (3)

4.4 Complete the following sentences by writing only the missing word or words next to the question number (4.4.1–4.4.3) in the ANSWER BOOK.

4.4.1 Soldering provides electrical … between the device and the PC board.

4.4.2 A cold solder joint is a joint in which the solder does … contact with the component lead or PCB copper strip.

4.4.3 The main types of injuries associated with electricity are …

(3 × 1) (3)

[20]

QUESTION 5

5.1 Explain why it is important to complete a fault report. (4)

5.2 The graph in FIGURE 5 shows the plant breakdown for a company over a six-month period.

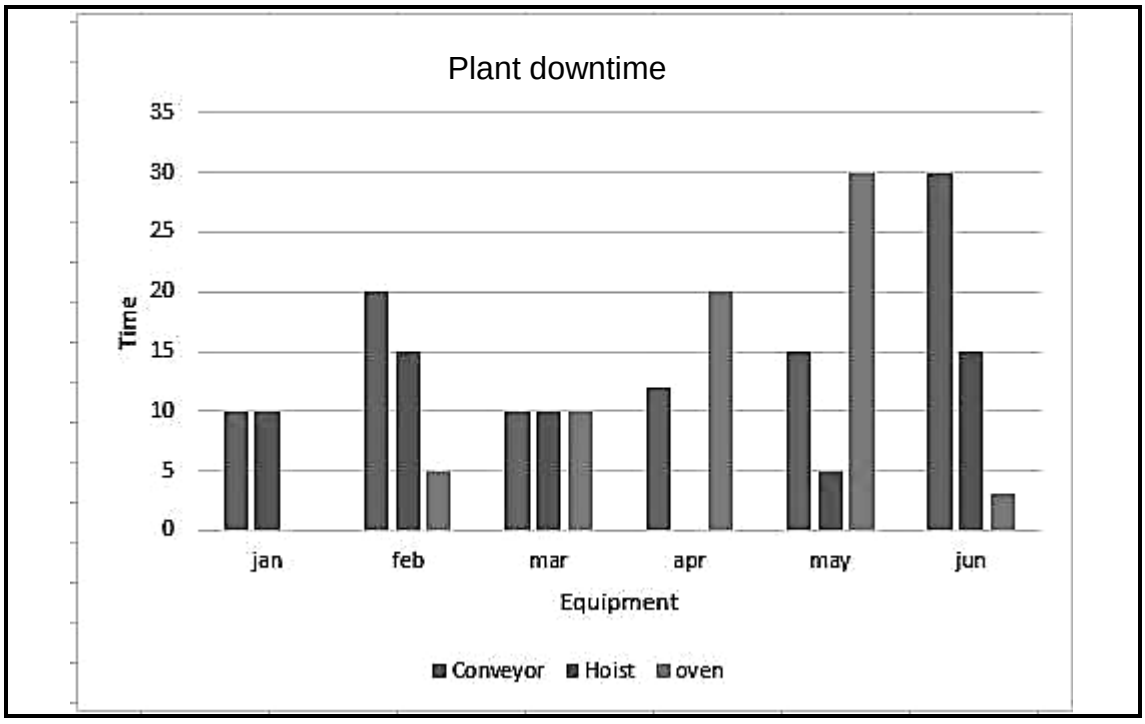

FIGURE 5

5.2.1 Identify the equipment that represents the largest breakdown over the six-month period. (1)

5.2.2 Give the total downtime for all the equipment individually. (3)

5.2.3 Derive a possible solution from the graph to reduce the downtime of the equipment. (2)

[10]

TOTAL: 100

Copyright reserved