higher education & training

Department:
Higher Education and Training
REPUBLIC OF SOUTH AFRICA

NATIONAL CERTIFICATE (VOCATIONAL)

ELECTROTECHNOLOGY
NQF LEVEL 2

(12040212)

27 February 2018 (X-Paper)
09:00–12:00

This question paper consists of 11 pages.

NCV

TIME: 3 HOURS
MARKS: 100

INSTRUCTIONS AND INFORMATION

1. Answer ALL the questions.
2. Read ALL the questions carefully.
3. Number the answers according to the numbering system used in this question paper.
4. Calculations must be rounded off to the THIRD decimal point.
5. Write neatly and legibly.

Copyright reserved

QUESTION 1

1.1 FIGURE 1 shows four incandescent lamps with different filament-resistance values connected to a 12 V supply.

Analyse FIGURE 1 and answer the questions.

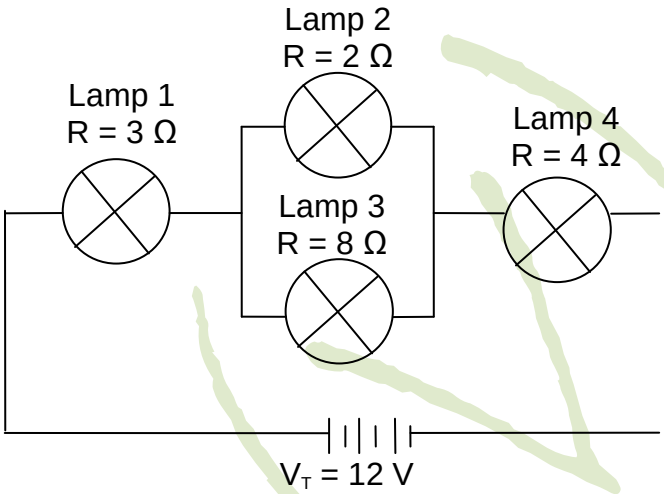

FIGURE 1

1.1.1 Refer to the way in which ALL the lamps are connected to each other and identify the type of circuit connection. (1)

1.1.2 Calculate the total resistance of the circuit. (6)

1.1.3 Calculate the total current flowing through the circuit. (2)

1.1.4 Calculate the total power drawn by the circuit. (2)

1.2 Conductors come in different shapes and sizes and are made from different materials.

State FOUR factors that influence the resistance of a conductor. (4)

1.3 A transformer is a device that transfers electrical energy from one circuit to another by electromagnetic induction.

Name THREE parts that make up a basic transformer. (3)

1.4 Give TWO characteristics of a relay. (2)
[20]

Copyright reserved

QUESTION 2

2.1 Match the light circuit in COLUMN B to the room or rooms in COLUMN A. Write only the letter (A–D) next to question number (2.1.1–2.1.4) in the ANSWER BOOK.

COLUMN A	COLUMN B
2.1.1 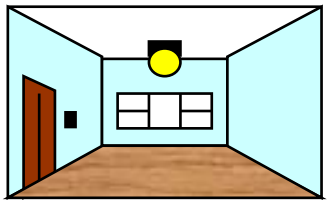	A 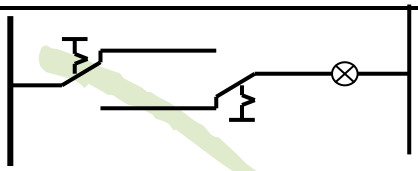
2.1.2 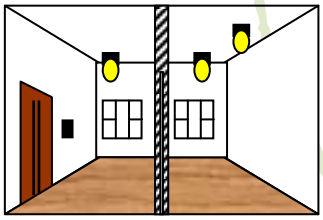	B 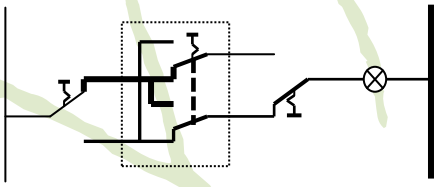
2.1.3 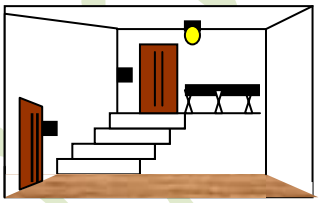	C 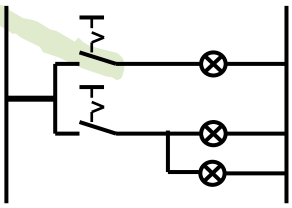
2.1.4 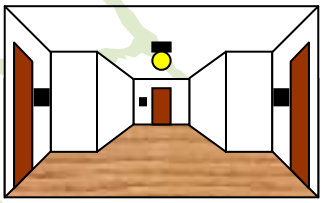	D 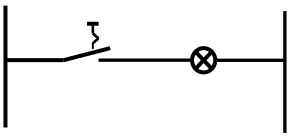

(4 × 1) (4)

2.2 Refer to FIGURE 2 below of a geyser connected to a main supply and answer the questions.

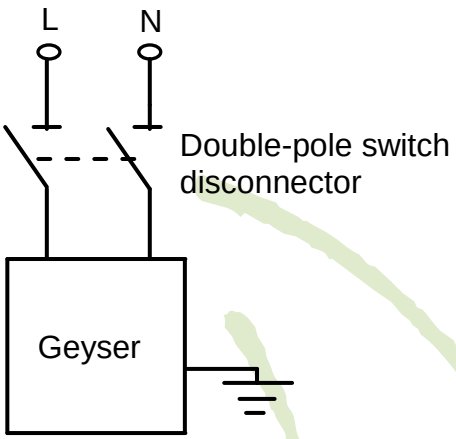

FIGURE 2

Redraw FIGURE 2 in the ANSWER BOOK and indicate how a timer will be connected in the circuit. (4)

2.3 When an electrician is wiring a domestic installation, the wiring code SANS 10142 must always be adhered to.

Complete the following sentences by writing down the missing word or words. Write only the missing word or words next to the question number (2.3.1–2.3.4) in the ANSWER BOOK.

Any point of a distribution board that has to be reached during normal operation shall not exceed the height of (2.3.1) … m above floor (or walking) level. However, the distribution board may be mounted higher if it can be disconnected from the supply by a switch disconnector that is less than (2.3.2) … m above floor level. Unless a residential distribution board is housed in an enclosure and direct access cannot be obtained by an infant, no part of an indoor distribution board shall be less than (2.3.3) … m above the floor level and no part of an outdoor distribution board shall be less than (2.3.4) … m above the ground level. (4 × 1) (4)

2.4 An electrician has been asked to install an extra socket outlet 1 m away from an existing socket outlet in the staff kitchen. The PVC conduit and PVC-4 × 4 wall box have already been connected to the existing socket outlet and cemented into the wall.

2.4.1 Explain the term *chasing* when installing conduit. (3)

2.4.2 Explain how the electrician will connect the new socket outlet to the existing socket outlet.

NOTE: The explanation must include conductor colours, cross-sectional area and terminals. (5)

2.5 In a distribution board there are two types of bars. One is called an earth bar.

What is the second type called? (1)

2.6 You have been asked to connect a 1,5 kW floodlight to a 220 VAC supply and have been given a 5 A switch to control the floodlight.

2.6.1 Calculate the current that will be drawn by the floodlight. (2)

2.6.2 Explain whether it is safe to use a 5 A switch to control the floodlight by referring to the answer given in QUESTION 2.6.1. (2)

[25]

QUESTION 3

3.1 Refer to FIGURE 3 below and answer the questions.

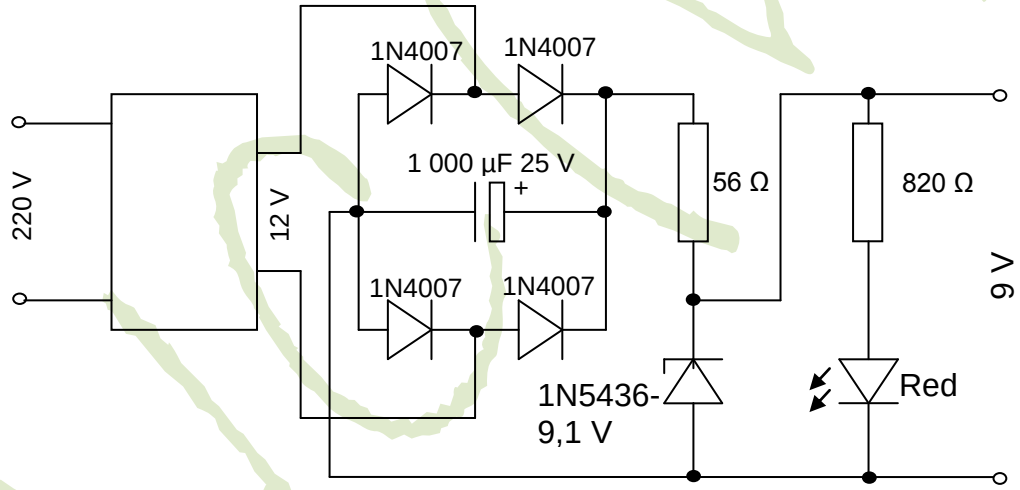

9 V-regulated power supply

FIGURE 3

3.1.1 Name the type of transformer used and include values. (2)

3.1.2 Explain the importance of the 25 V marking on the capacitor. (2)

3.1.3 In which type of configuration are the diodes connected? (1)

3.1.4 Identify the component marked 1N5436-9,1 V. (1)

3.1.5 Explain what an electrician means when he/she says component 1N5436-9,1 V is connected in the reverse bias configuration. (2)

3.1.6 Identify the component that gives off a red light. (1)

3.1.7 Explain the reason for connecting the 820 Ω component in series with the component that gives off a red light. (3)

Copyright reserved

3.2 Tools used to work on printed circuit boards are specialised and generally small.

Complete the table below by writing only the answer next to the question number (3.2.1–3.2.6) in the ANSWER BOOK.

TYPE OF TOOL	NAME OF THE TOOL	EXPLAIN THE USAGE OF THE TOOL
	3.2.1	3.2.2
	3.2.3	3.2.4
	3.2.5	3.2.6

(6 × 1) (6)

3.3 Resistors can fail due to exceeding its predicted operating life, mechanical strength and vibrations which can lead to gradual failure.

Identify THREE ways in which a resistor can fail. (3)

3.4 Refer to FIGURE 4 below and answer the questions.

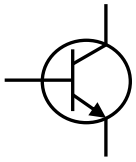

FIGURE 4

3.4.1 Identify the type of transistor. (1)

3.4.2 Explain how the collector, base and emitter must be biased to allow the transistor to switch on. (3)

[25]

QUESTION 4

4.1 Study the multimeter connections in FIGURE 5 below and answer the questions.

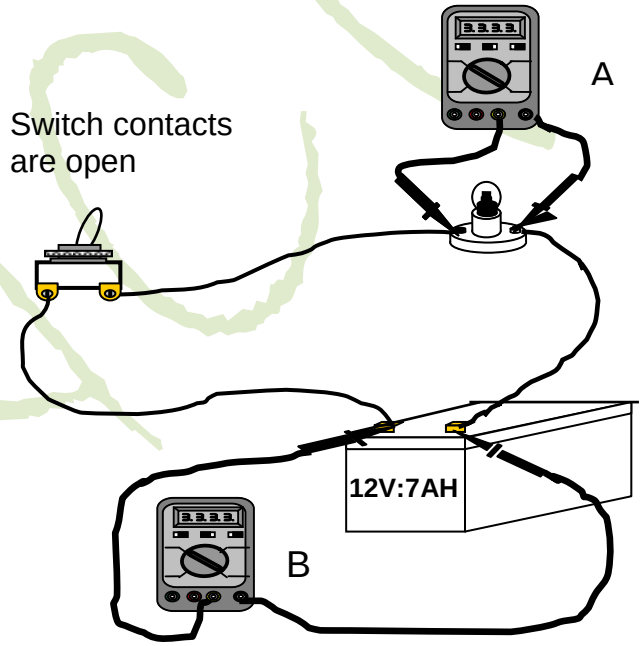

FIGURE 5

4.1.1 What will the voltage reading on multimeter A be if the switch is open?

4.1.2 What will the voltage reading on multimeter B be if the switch is open?

(2 × 2) (4)

4.2 You suspect that the switch is not operating correctly.

Study the multimeter connections in FIGURE 6 below and explain in detail what you will do to test the switch for operation.

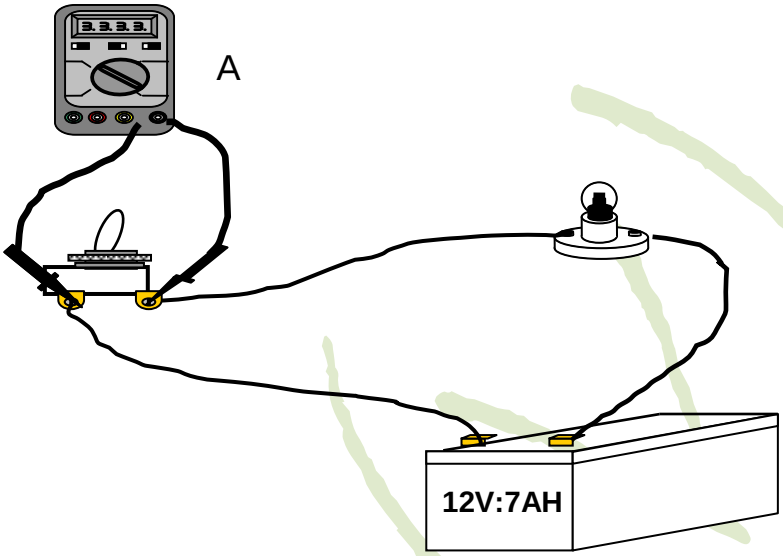

FIGURE 6 (5)

4.3 Study the multimeter connections in FIGURE 7 below and answer the questions.

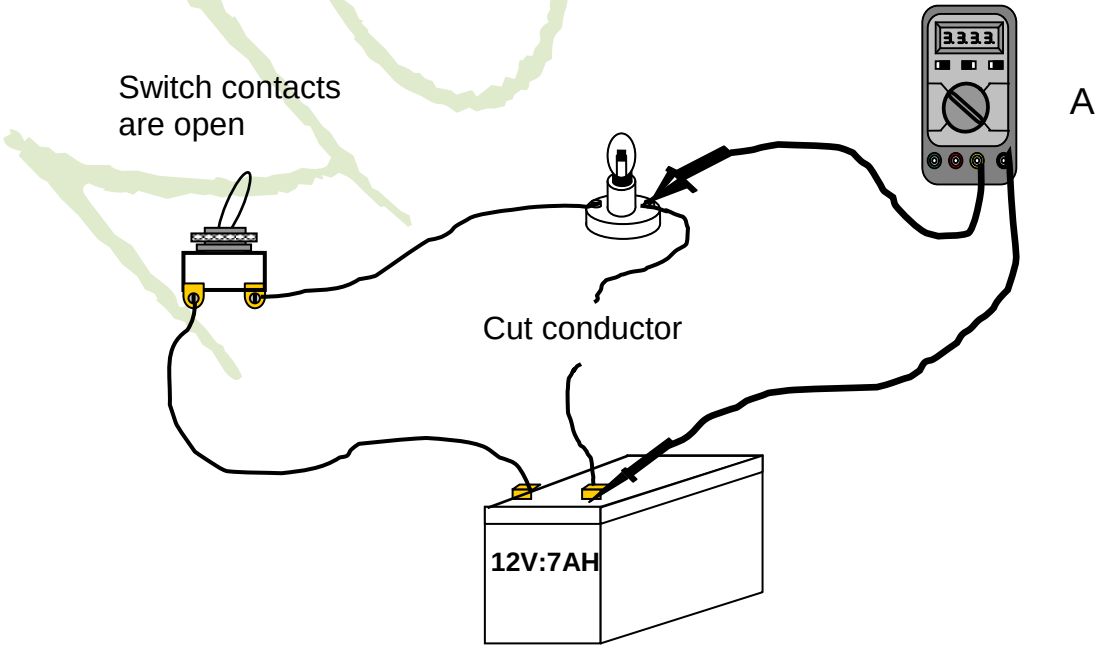

FIGURE 7

4.3.1 What is the voltage reading on multimeter A when the circuit is open?

4.3.2 What is the resistance reading on multimeter A when the switch is open?

(2 × 2) (4)

4.4 An electrician has been asked what possible faults could cause a bedside lamp not to work. There is electric supply to the socket outlet in the bedroom because he/she tested it by plugging in a radio that worked.

4.4.1 Identify TWO faults that can occur at the three-pin plug of the supply cord. (2)

4.4.2 Identify ONE fault that can occur in the cord from the three-pin plug to the switch. (1)

4.4.3 Identify TWO faults that can occur at the switch. (2)

4.4.4 Identify TWO faults that can occur in the lamp holder. (2)

[20]

QUESTION 5

Read the case study below and complete the accident report. Write the answer next to the question number (5.1–5.10) in the ANSWER BOOK.

On 15 November 2017 at 10:05 Peter Smith went to sharpen his centre punch as the point was rounded.

He wore his safety goggles as he was trained to do so.

While Peter was sharpening the point of the centre punch, he noticed that the tool rest was a little loose on the bench grinder but carried on sharpening the centre punch point anyway.

Suddenly the centre punch flung forward and got stuck between the tool rest and the grinding wheel bringing his hand forward and causing it to press against the grinding wheel. He was not wearing leather gloves and the skin on his index and middle fingers was damaged. Mr Simon Zilani, who witnessed the accident, took Peter to the first-aid room for treatment.

At the first-aid room, nurse Pamela Ncobo attended to him by dressing the wound.

Mrs Rene Williams, the human resources manager for ASD Hydraulics Maintenance and Repairs, completed the W.C.I.2 form on behalf of the company at 12:30 that same day.

EMPLOYER'S REPORT OF AN ACCIDENT

DECLARATION BY EMPLOYER

I hereby declare that the particulars, shown in items 1 to 62 of this report, of an alleged injury on duty are to the best of my knowledge and belief true and accurate.

Signed on this (5.1) … day of November … (5.2) …

Signature:

EMPLOYER

Registered name with the compensation commissioner:

(5.3) …

Contact person:

(5.4) …

Nature of business, trade or industry:

(5.5) …

EMPLOYEE

Surname: (5.6) …

First name: (5.7) …

ACCIDENT

Briefly explain the task the employee was performing at the time of the accident:

(5.8) …

Short description of how the accident occurred:

(5.9) …

Nature of injury sustained:

(5.10) …

(10 × 1) **[10]**

TOTAL: 100

Copyright reserved