higher education & training

Department:
Higher Education and Training
REPUBLIC OF SOUTH AFRICA

NATIONAL CERTIFICATE (VOCATIONAL)

ELECTROTECHNOLOGY
NQF LEVEL 2

(12040212)

10 December 2020 (X-paper)
09:00–12:00

Calculators may be used.

This question paper consists of 8 pages.

491Q1N2010

Copyright reserved

TIME: 3 HOURS
MARKS: 100

INSTRUCTIONS AND INFORMATION

1. Answer all the questions.
2. Read all the questions carefully.
3. Number the answers according to the numbering system used in this question paper.
4. All drawings must be neat and in proportion.
5. All work you do not want to be marked must be clearly crossed out.
6. Write neatly and legibly.

Copyright reserved

QUESTION 1

1.1 Explain the following terms with regard to electrical current:

1.1.1 Conductors

1.1.2 Insulators

(2 × 1) (2)

1.2 When current flows through a conductor, heat is produced. Joule's law is applicable to this.

Write Joule's law as a mathematical equation and explain the meaning of each symbol. (5)

1.3 Two resistors with values of 6 Ω and 4 Ω are connected in parallel. The parallel branch is connected in series with a 10 Ω resistor. This circuit is then connected across a 50 volt supply.

1.3.1 Draw the circuit diagram. (3)

1.3.2 Calculate the total resistance of the circuit. (3)

1.3.3 Calculate the total current flowing through the circuit. (2)

1.4 The basic principle of how an oscilloscope functions can be explained by the block diagram shown in FIGURE 1.

Match each description below with a letter in the diagram. See example.

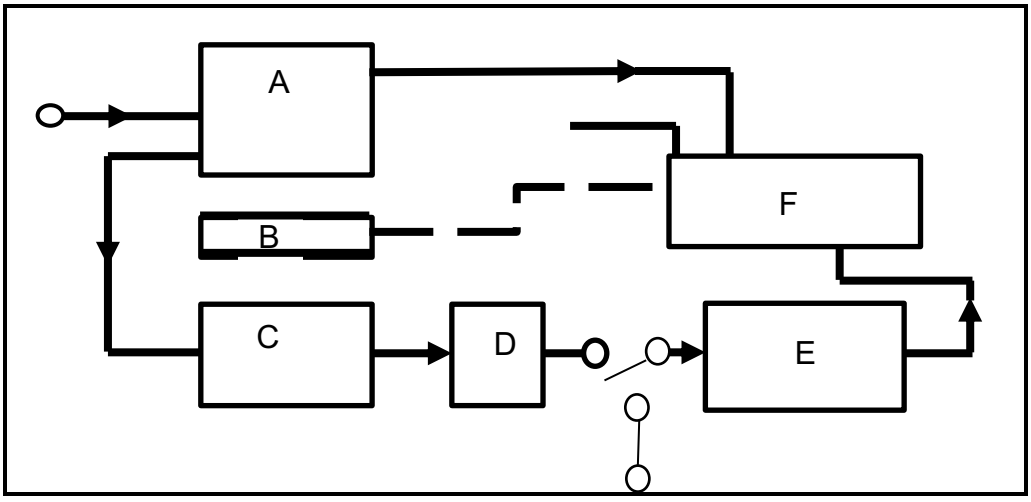

FIGURE 1

Example: Cathode-ray tube – F

1.4.1 Time base

1.4.2 X-amplifier

1.4.3 Y-amplifier

1.4.4 Power supply

1.4.5 Trigger

(5 × 1) (5)
[20]

QUESTION 2

2.1 Electrical drawings can represent anything from a simple single-line drawing to complex power-control circuits.

Make a neat sketch of the following common diagrams:

2.1.1 Circuit diagram

2.1.2 Wiring diagram

2.1.3 Block diagram

(3 × 2) (6)

2.2 A 3,5 kW floodlight must be installed. The supply voltage is 240 V. The cable to be used is a two-core cable with a protective conductor made of copper.

The length of the cable required for the installation is 30 m and it will be enclosed in an insulated wall.

Calculate the size of the circuit breaker needed to protect this circuit. (3)

2.3 It is important for an electrician to prepare a parts list of materials that will be required for a specific installation.

Copy and complete the following materials requisition form in the ANSWER BOOK. Name FIVE materials and the quantity needed to make up the distribution board:

MATERIALS REQUISITION FORM		
Date:	Completion date:	
Customer's name:	Electrician's name:	
REFERENCE	DESCRIPTION	QUANTITY
Distribution board	20-way flush mount	1
	(2.3.1) …	
	(2.3.2) …	
	(2.3.3) …	
	(2.3.4) …	
	(2.3.5) …	

(10 × 1) (10)

Copyright reserved

2.4 Name FOUR main types of injuries caused by electricity. (4)

2.5 What is the aim of bonding the noncurrent-carrying components of an electrical system? (2)

[25]

QUESTION 3

3.1 Analyse the circuit in FIGURE 2.

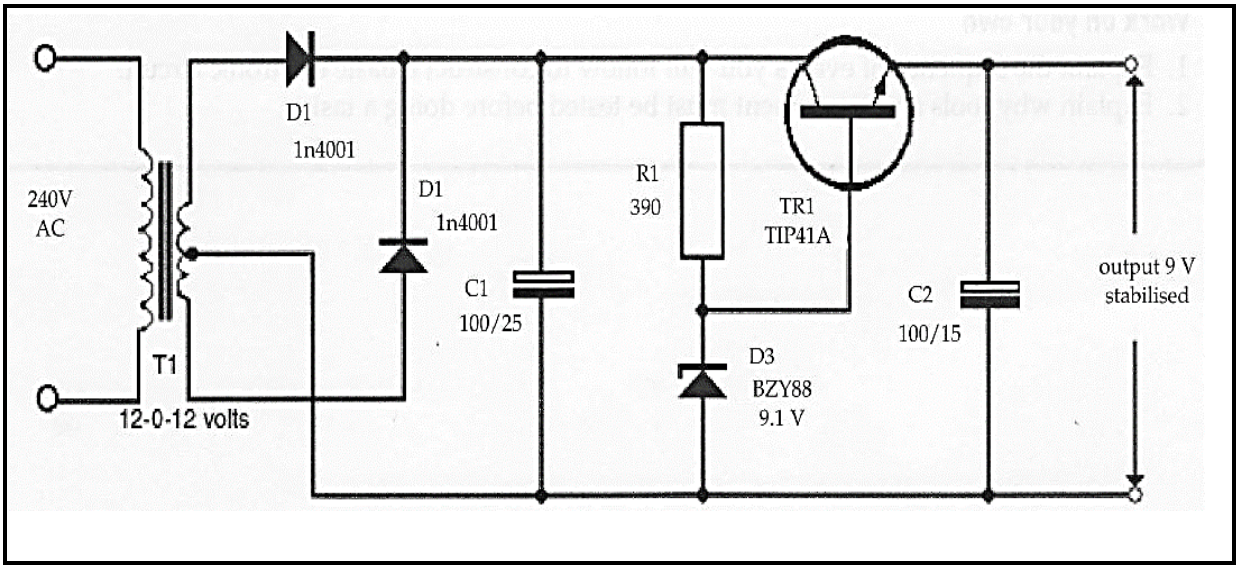

FIGURE 2

Draw up a materials list of components needed to build the PSU shown in FIGURE 2. Copy and complete the following table in the ANSWER BOOK.

ITEM	DESCRIPTION	QUANTITY

(7 × 1) (7)

3.2 Study FIGURE 3 below and answer the questions.

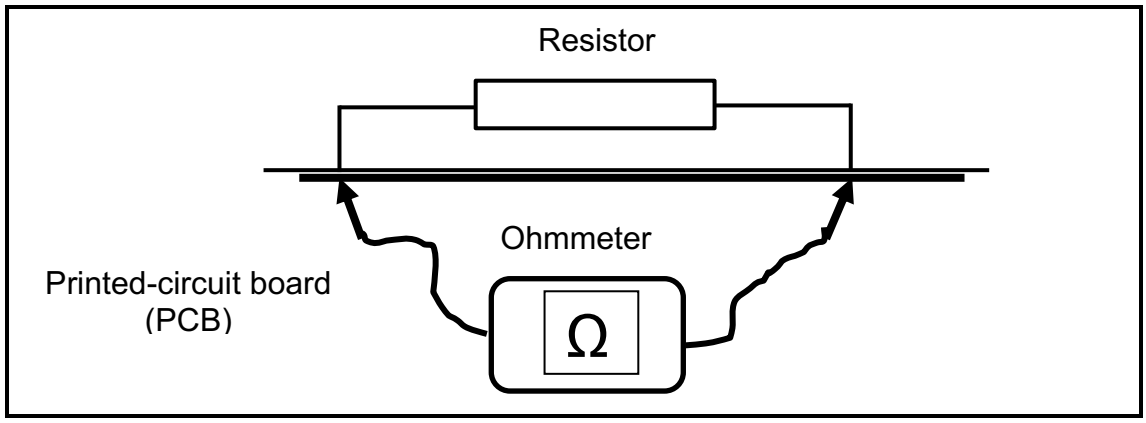

FIGURE 3

3.2.1 State what is wrong with the method of measuring the resistance of the resistor shown in FIGURE 3. (1)

3.2.2 Briefly explain the correct method of measuring the resistance of a resistor. (2 × 1) (2)

3.3 Study FIGURE 4 below and answer the questions.

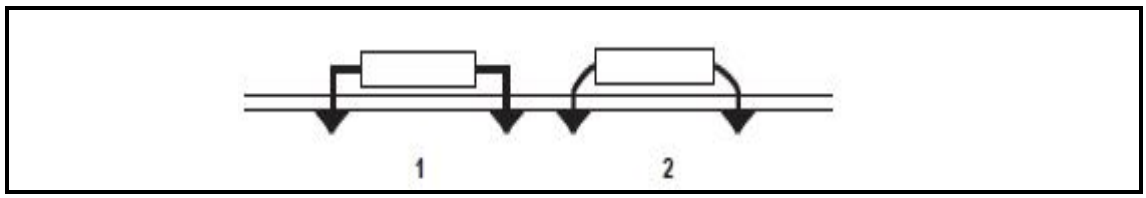

FIGURE 4

3.3.1 State which ONE of the two resistors shown in FIGURE 4 is correctly mounted to the PCB and give a reason for your choice. (2 × 1) (2)

3.3.2 State the factors to be considered when soldering or mounting an integrated circuit (IC) to a PCB. (3)

3.4 Briefly explain how to test a diode using a digital multimeter. (5)

3.5 A visual inspection of a completed project should be carried out before testing the circuit.

Give FIVE general guidelines for a visual inspection of a completed circuit. (5)
[25]

Copyright reserved

QUESTION 4

4.1 State the FIVE steps of troubleshooting a mechatronic technician is required to do on different faulty equipment. (5 × 1) (5)

4.2 Redraw the SIX-stage process shown in FIGURE 5 in the ANSWER BOOK. Illustrate and explain how the half-cut method technique will be used in solving the problem in this process.

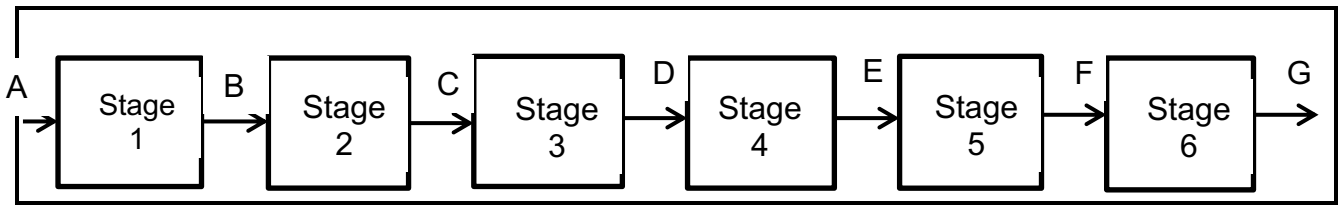

(6)

FIGURE 5

4.3 Study FIGURE 4 below and answer the questions.

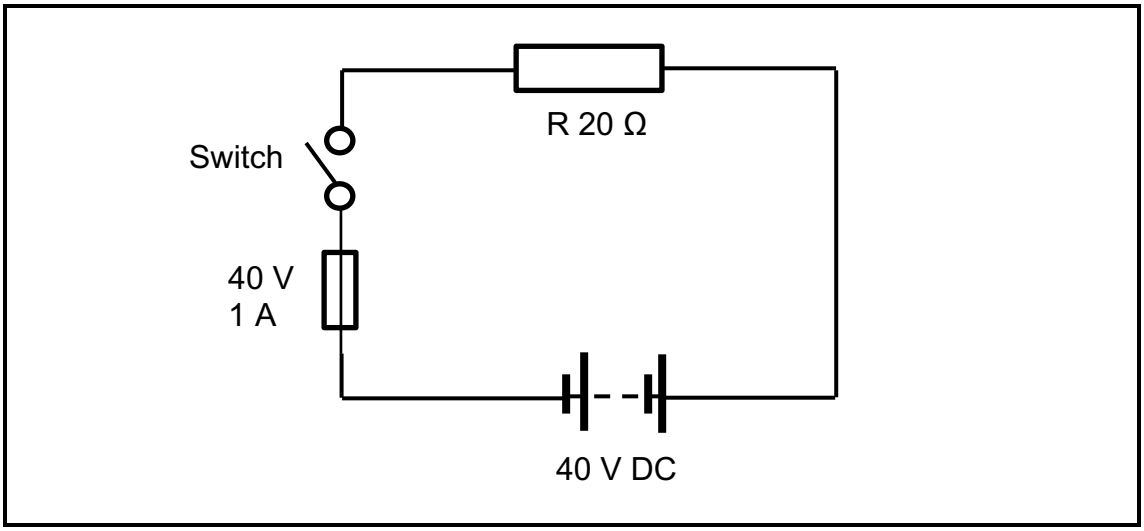

FIGURE 6

4.3.1 State why the fuse will blow. (2)

4.3.2 State what action should be taken to ensure that the circuit functions correctly. (1)

4.4 Maintenance procedures relate to the repair, calibration, replacement and refurbishing of electrical equipment and systems.

State briefly what each of the following categories of the maintenance procedure entails:

4.4.1 Preventive

4.4.2 Corrective

4.4.3 Predictive

(3 × 2) (6)
[20]

QUESTION 5

Draw up a bar chart for the following task.

The task consists of FIVE activities.

- First activity (A) takes 3 weeks, starting in week 1
- Second activity (B) takes 1 week, done in week 3
- Third activity (C) takes 2 weeks
- Fourth activity (D) takes 3 weeks
- Fifth activity (E) takes 4 weeks

NOTE: The fourth activity cannot start before the first and second activities are completed. The third can only start after the fourth is completed. Activity five must be completed in the ninth week.

5.1 Draw a simple bar chart to display the activities of this task. (8 × 1) (8)

5.2 Due to unforeseen circumstances, activity five took 2 extra weeks to complete.

When will the fifth activity be completed? (2)
[10]

TOTAL: 100

Copyright reserved