higher education & training

Department:
Higher Education and Training
REPUBLIC OF SOUTH AFRICA

NATIONAL CERTIFICATE (VOCATIONAL)

ELECTRONIC CONTROL AND DIGITAL ELECTRONICS
NQF LEVEL 4

(12041024)

12 November 2018 (Y-Paper)
13:00–16:00

This question paper consists of 5 pages and 1 formula sheet.

Copyright reserved

TIME: 3 HOURS
MARKS: 100

INSTRUCTIONS AND INFORMATION

1. Answer ALL the questions.
2. Read ALL the questions carefully.
3. Number the answers according to the numbering system used in this question paper.
4. Write neatly and legibly.

NCV

QUESTION 1

1.1 List FOUR faults that may occur in a parallel RL circuit. (4)

1.2 An RC series circuit has a capacitance of 15 µF and a resistance of 70 Ω. The two components are connected to a 120 V/50 Hz AC supply.

Calculate the following:

1.2.1 The capacitive reactance. (2)

1.2.2 The impedance. (2)

1.2.3 The magnitude of current following through the circuit. (2)

1.2.4 The phase angle between the supply voltage and supply current. (3)

1.2.5 Draw the impedance diagram. (3)

1.3 Explain the relationship between current and voltage in an RC series circuit. (4)
[20]

QUESTION 2

2.1 Almost every electronic device contains at least one stage of amplification. Many devices contain several stages of amplification and therefore several amplifiers. Stages of amplification are added when a single stage will not provide the required amount of amplification. When amplifiers are connected together, signals must enter and leave the amplifier. The process of transferring energy is known as coupling.

2.1.1 Name the three requirements that must be fulfilled in the design of the coupling circuitry. (3)

2.1.2 Explain how each requirement you gave in 2.1.1 works. (3)

2.1.3 Name the three common methods of amplifier coupling. (3)

Copyright reserved

2.2 Explain how FIGURE 1 below functions.

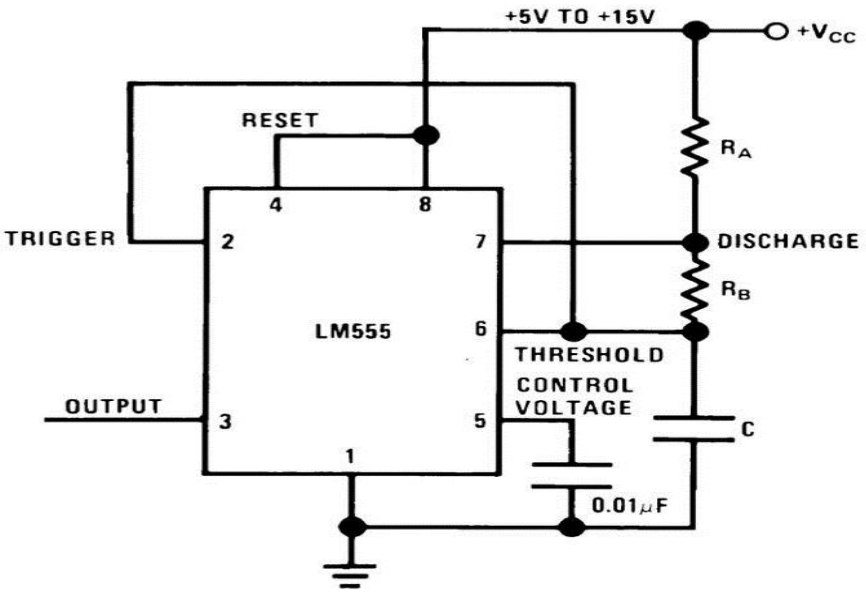

FIGURE 1 (9)

2.3 Study the half wave phase control circuit in FIGURE 2 below and then answer the questions.

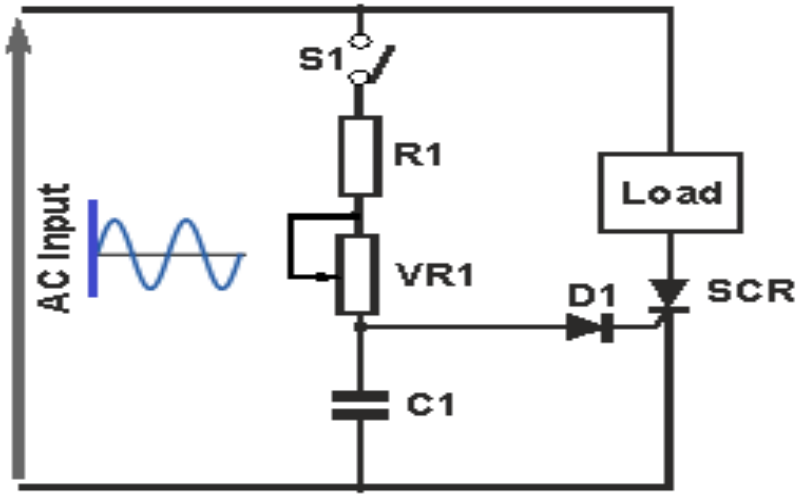

FIGURE 2

2.3.1 Draw the output phase controlled waveform for FIGURE 2 above. (3)

2.3.2 Explain how the waveform in QUESTION 2.4.1 is achieved. (9)

[30]

Copyright reserved

QUESTION 3

3.1 As a sound technician you are given the following components to design a voltage divider biased common emitter amplifier:

R1 = 100 kΩ
R2 = 10 kΩ
RC = 10 kΩ
RE = 1 kΩ
Tr = Q2N222

3.1.1 Explain step by step or give clear detail on how you will go about designing a single stage amplifier using a bipolar transistor. (7)

3.1.2 Draw a labelled circuit diagram of the amplifier you designed. (6)

3.2 You are a senior technician in your company.

Explain step by step to the new apprentice how to use a technical manual when looking for a specific electronic component. (5)

3.3 Explain how to test an inductor on an RLC filter using an analogue multimeter. (2)
[20]

NCV

QUESTION 4

4.1 Apply DeMorgan's theorems and simplify the following Boolean expression:

$$Z = \overline{\overline{A}.\overline{B}.C + A.B.C} + \overline{\overline{A}.\overline{B}.C} \quad (7)$$

4.2 Convert 649 to its excessive 3 (EX3) binary equivalent. (3)

4.3 Give FIVE applications of shift registers. (5)

[15]

QUESTION 5

5.1 Draw a ladder logic diagram to solve the following security problem in your workshop.

When LS-01(limit switch) is ON, the buzzer should sound for 3 seconds (security) and then the conveyor should start. When LS-01 is cleared the conveyor should start. (8)

5.2 The circuit below is used to alert people if fire breaks occur.

This simple circuit operated by the actuation or closure any of the switches. This in turn triggers the fire alarm (siren).

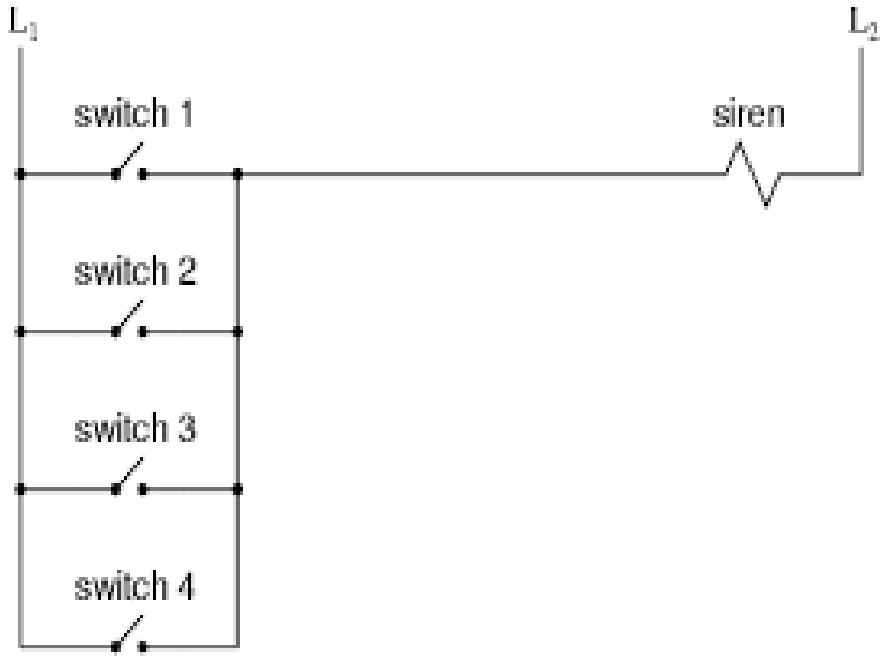

Copyright reserved

The disadvantage of this simple fire alarm is that an open circuit in any of the rungs causes false alarms.

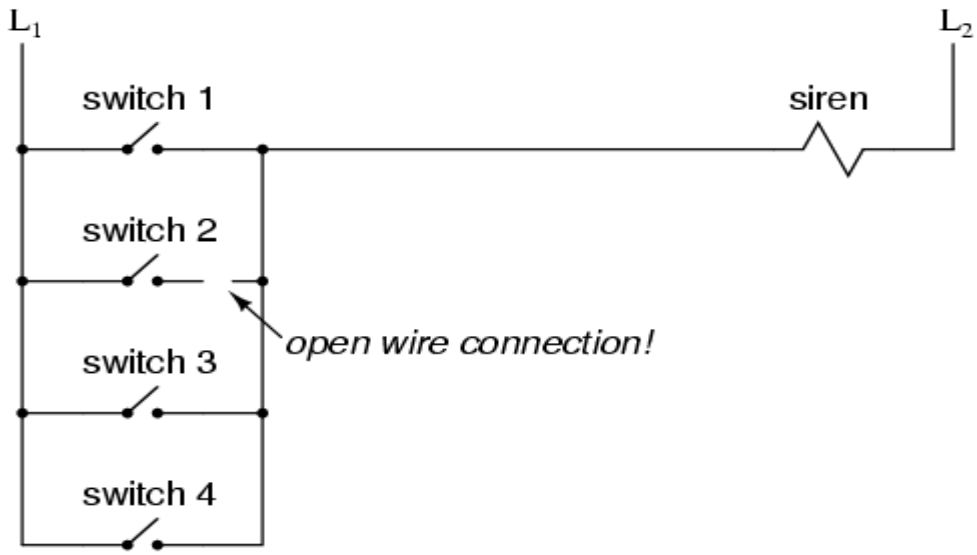

5.2.1 What changes will you make to the existing circuit to eliminate this problem? (3)

5.2.2 Design a new diagram showing new improvements. (4)

[15]

TOTAL: 100

Copyright reserved

ELECTRONIC CONTROL AND DIGITAL ELECTRONICS L4

FORMULA SHEET

DC THEORY

i. $V = I \times R$

ii. $R_T = R_1 + R_2$

iii. $\frac{1}{R_T} = \frac{1}{R_1} + \frac{1}{R_2}$

iv. $P = V \times I$

v. $P = I^2 \times R$

vi. $P = \frac{V^2}{R}$

AC THEORY

i. $t = \frac{1}{f}$

ii. $\theta = E_m Sin\, 2\pi ft$

iii. $i = I_m\ Sin 2\pi ft$

iv. $\theta = 2\pi ft$

v. $I_{AVE} = \frac{I_1+I_2+I_3}{n}$

vi. $I_{RMS} = \sqrt{\frac{I_1^2+I_2^2+I_3^2}{n}}$

vii. $V_{AVE} = \frac{V_1+V_2+V_3}{n}$

viii. $V_{RMS} = \sqrt{\frac{V_1^2+V_2^2+V_3^2}{n}}$

ix. $V_{RMS} = V_M$ x *0.707*

x. Form factor $= \frac{RMS\ value}{AVE\ value}$

xi. Crest factor $= \frac{Maxcimum\ value}{RMS\ value}$

xii. $\omega = 2\pi f$

xiii. $X_c = \frac{1}{2\pi fC}$

xiv. $X_L = 2\pi fL$

xv. $V_T = \sqrt{V_R^2 + V_L^2}$

xvi. $V_T = \sqrt{V_R^2 + V_C^2}$

xvii. $V_T = \sqrt{V_R^2 + (V_L \cong V_C)^2}$

xviii. $Z = \sqrt{R^2 + X_C^2}$

xix. $Z = \sqrt{R^2 + X_L^2}$

xx. $V_{AVE} = V_M$ x *0.637*

xxi. $Z = \sqrt{R^2 + (X_L \cong X_C)^2}$

xxii. $I_T = \frac{V_T}{Z}$

xxiii. $V_C = I_T \times X_C$

xxiv. $V_R = I_T \times R$

xxv. $V_L = I_T \times X_L$

xxvi. $\theta = \cos^{-1}\frac{R}{Z}$

xxvii. $fo = \frac{1}{2\pi\sqrt{LC}}$

TRANSISTORS

i. $I_e = I_c + I_b$

ii. $\beta = \frac{I_C}{I_B}$

iii. $I_B = \frac{V_{BB}-V_{BE}}{R_B}$

iv. $I_C = \frac{V_{CC}}{R_L}$

v. $R_{in} = \frac{V_{be}}{I_b}$

vi. $R_{out} / R_{uit} = \frac{V_{ce}}{I_c}$

vii. $V_{ce} = V_{cc} - V_{RC}$

viii. $V_{cc} = V_{RC} + V_{ce}$

Copyright reserved