higher education & training

Department:
Higher Education and Training
REPUBLIC OF SOUTH AFRICA

NATIONAL CERTIFICATE (VOCATIONAL)

ELECTRONIC CONTROL AND DIGITAL ELECTRONICS
NQF LEVEL 4

(12041024)

1 March 2018 (Y-Paper)
13:00–16:00

This question paper consists of 6 pages and 1 formula sheet.

NCS

Copyright reserved

TIME: 3 HOURS
MARKS: 100

INSTRUCTIONS AND INFORMATION

1. Answer ALL the questions.
2. Read ALL the questions carefully.
3. Number the answers according to the numbering system used in this question paper.
4. Write neatly and legibly.

NCS01

Copyright reserved

QUESTION 1

1.1 In a series-resonant circuit:

R = 10 Ω L = 0,015 H
V_T = 20 V F_r = 1 kHz

Calculate:

1.1.1 The value of the capacitor (4)

1.1.2 The voltage drop across L and C (6)

1.1.3 The Q-factor of the circuit (3)

1.2 Name THREE characteristics of a series-resonance circuit. (3)

1.3 Draw a labelled circuit diagram of a low-pass filter. (4)

[20]

QUESTION 2

2.1 As a trainee technician one of the critical things you must know is to master components and understand their behaviour and applications in real life.

Study the symbols below and answer the questions.

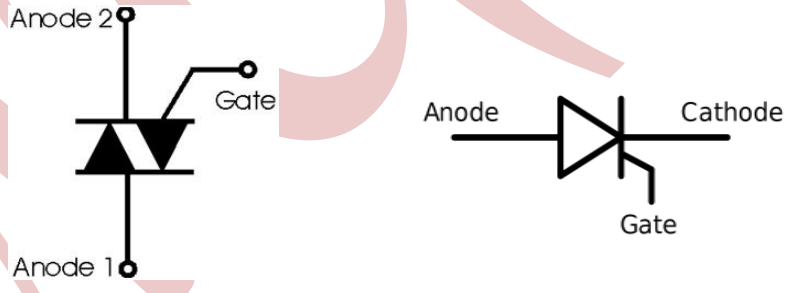

FIGURE A **FIGURE B**

2.1.1 Give the full name of the IEC symbol represented by FIGURE B. (1)

2.1.2 Name any THREE industrial applications of FIGURE B. (3)

2.1.3 Give THREE advantages FIGURE A has over FIGURE B. (3)

2.1.4 Give the full name of the IEC symbol represented by FIGURE A. (1)

2.1.5 Name THREE industrial applications of FIGURE A. (3)

Copyright reserved

2.2 The SMPS became very popular over the years because it provides a regulated voltage with more efficiency.

2.2.1 What does SMPS stand for? (2)

2.2.2 Make a neat, labelled block diagram to describe the use, application and functioning of an SMPS. (10)

2.2.3 Why is this type of power supply more preferable nowadays? (2)

2.2.4 Give TWO applications where an SMPS can be used. (2)

2.3 Give THREE factors that affect the stability of the Q-factor. (3)
[30]

QUESTION 3

3.1 Electronic circuits can easily malfunction, but in most cases the faults are fixable.

Give THREE types of faults in an electronic circuit. (3)

3.2 List FOUR faults commonly developed in relays which will result in the malfunction of a circuit. (4)

3.3 Name THREE measurements that can be performed using a diode tester. (3)

3.4 Use the information provided below (taken from a technical manual) to determine the main characteristics of the following transistor:

Device	POL Mat	PKG	Lead	V_{CB} Max	V_{CE} Max	V_{EB} Max	Ic Max	P_{TOT}	H_{FE}
BC109B	NS	T108	1	30	20	5	100 mA	300 mW	200 Mn

(5)

3.5 List FIVE visual and mechanical inspections that can be performed on faulty equipment. (5)
[20]

Copyright reserved

QUESTION 4

4.1 Give the Boolean expression for each of the following logic gates:

4.1.1 AND gate

4.1.2 NAND gate

4.1.3 NOR gate

4.1.4 XOR gate

4.1.5 OR gate

(5 × 2) (10)

4.2 Determine the Boolean expression for the logic circuit below.

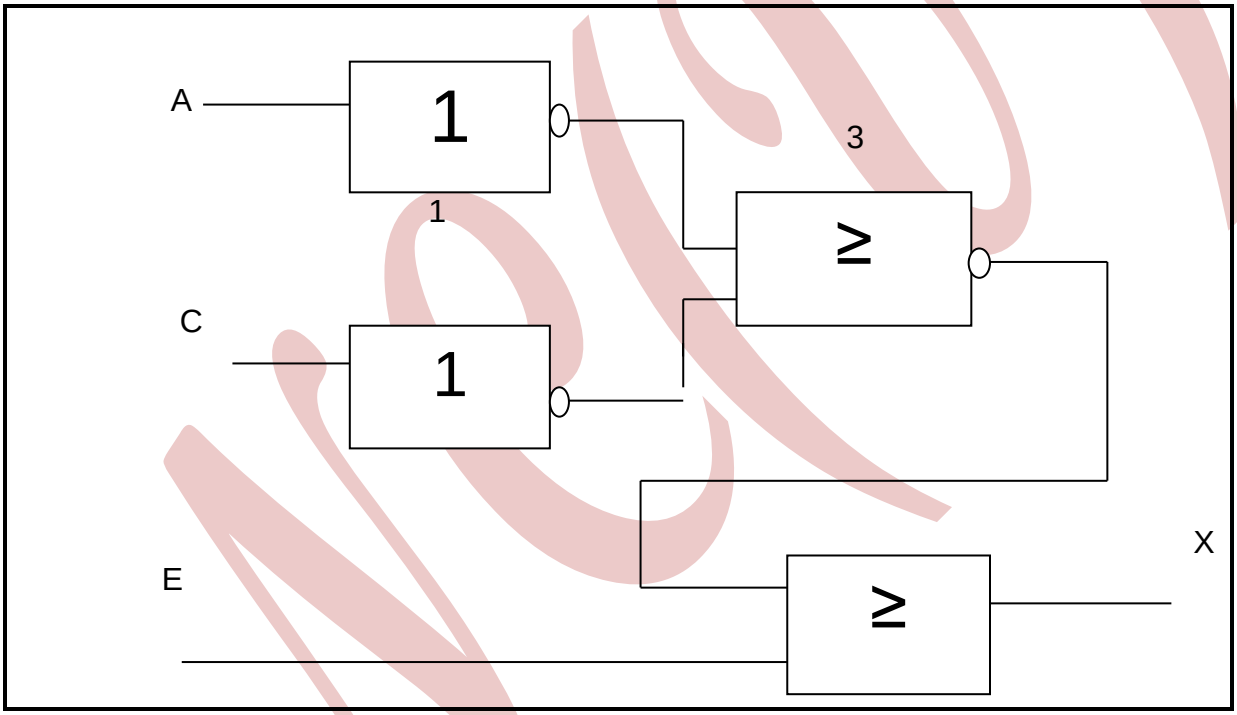

(5)
[15]

QUESTION 5

5.1 Design a ladder logic diagram of an off-timer that can be used in fans or lights.

The light/fan must be on for 60 seconds after which it must go off. To switch it on again the circuit must be reset. (7)

5.2 Make schematic ladder diagrams to represent the following situations:

5.2.1 Lamp controlled by a hand switch

5.2.2 OR gate

5.2.3

A	Output
0	1
1	0

5.2.4 A large laboratory or industrial building is to be equipped with a fire alarm system which can be activated by any one of four latching switches installed throughout the facility. The alarm siren should energise if any one of the switches is actuated.

(4 × 2) (8)

[15]

TOTAL: 100

Copyright reserved

FORMULA SHEET

DC THEORY

i. $V = I \times R$

ii. $R_T = R_1 + R_2$

iii. $\frac{1}{R_T} = \frac{1}{R_1} + \frac{1}{R_2}$

iv. $P = V \times I$

v. $P = I^2 \times R$

vi. $P = \frac{V^2}{R}$

AC THEORY

i. $t = \frac{1}{f}$

ii. $\theta = E_m \text{ Sin } 2\pi ft$

iii. $i = I_m \text{ Sin } 2\pi ft$

iv. $\theta = 2\pi ft$

v. $I_{AVE} = \frac{I_1+I_2+I_3}{n}$

vi. $I_{RMS} = \sqrt{\frac{I_1^2+I_2^2+I_3^2}{n}}$

vii. $V_{AVE} = \frac{V_1+V_2+V_3}{n}$

viii. $V_{RMS} = \sqrt{\frac{V_1^2+V_2^2+V_3^2}{n}}$

ix. $V_{RMS} = V_M \times 0{,}707$

x. $\text{Form factor} = \frac{\text{RMS value}}{\text{AVE value}}$

xi. $\text{Crest factor} = \frac{\text{Maximum value}}{\text{RMS value}}$

xii. $\omega = 2\pi f$

xiii. $X_c = \frac{1}{2\pi fC}$

xiv. $X_L = 2\pi fL$

xv. $V_T = \sqrt{V_R^2 + V_L^2}$

xvi. $V_T = \sqrt{V_R^2 + V_C^2}$

xvii. $V_T = \sqrt{V_R^2 + (V_L \cong V_C)^2}$

xviii. $Z = \sqrt{R^2 + X_C^2}$

xix. $Z = \sqrt{R^2 + X_L^2}$

xx. $V_{AVE} = V_M \times 0{,}637$

xxi. $Z = \sqrt{R^2 + (X_L \cong X_C)^2}$

xxii. $I_T = \frac{V_T}{Z}$

xxiii. $V_C = I_T \times X_C$

xxiv. $V_R = I_T \times R$

xxv. $V_L = I_T \times X_L$

xxvi. $\theta = \cos^{-1}\frac{R}{Z}$

xxvii. $fo = \frac{1}{2\pi\sqrt{LC}}$

TRANSISTORS

i. $I_e = I_c + I_b$

ii. $\beta = \frac{I_C}{I_B}$

iii. $I_B = \frac{V_{BB}-V_{BE}}{R_B}$

iv. $I_C = \frac{V_{CC}}{R_L}$

v. $R_{in} = \frac{V_{be}}{I_b}$

vi. $R_{out}/R_{uit} = \frac{V_{ce}}{I_c}$

vii. $V_{ce} = V_{cc} - V_{RC}$

viii. $V_{cc} = V_{RC} + V_{ce}$

Copyright reserved