higher education & training

Department:
Higher Education and Training
REPUBLIC OF SOUTH AFRICA

NATIONAL CERTIFICATE (VOCATIONAL)

ELECTRONIC CONTROL AND DIGITAL ELECTRONICS
NQF LEVEL 3

(12041023)

13 November 2018 (X-Paper)
09:00–12:00

This question paper consists of 6 pages.

NCV

Copyright reserved

TIME: 3 HOURS
MARKS: 150

INSTRUCTIONS AND INFORMATION

1. Answer ALL the questions.
2. Read ALL the questions carefully.
3. Number the answers according to the numbering system used in this question paper.
4. Write neatly and legibly.

NCV

QUESTION 1

1.1 1.1.1 State SIX precautions that must be observed when trying to prevent damage to a signal generator. (6)

1.1.2 A signal occupies 5 cm from the start of the cycle to the end.

If the time/division sweep switch is set to 3µs, calculate the time taken for ONE cycle and the frequency. (4)

1.2 Name FOUR applications of a Zener diode. (4)

1.3 Draw a fully labelled circuit diagram of a common emitter amplifier using an NPN transistor. (7)

1.4 Explain the operation of a half-wave rectifier using an AC input voltage. (4)

1.5 Complete the following paragraph by using the words in the list below. Write only the word(s) next to the question number (1.5.1–1.5.5) in the ANSWER BOOK.

p-type; n-type; minority; majority; reverse; forward; widens; narrows

An n-type channel JFET is formed between two (1.5.1) … layers, which are connected to the gate. (1.5.2) … carrier electrons flow from the source and exit the drain, forming the drain current. The PN junction is (1.5.3) … biased during normal operation, and this (1.5.4) … the depletion layers that extend into the n-channel only. As the depletion layers widen, the channel (1.5.5) …, restricting the current flow.

(5 × 1) (5)

1.6 Draw a fully labelled electronic symbol of a P-channel depletion-type MOSFET. (4)

1.7 List SIX characteristics of an ideal operational amplifier (op-amp). (6)

[40]

QUESTION 2

2.1 Convert the following numbers:

2.1.1 73_8, to binary

2.1.2 $9C_{16}$, to binary

2.1.3 10100100_2, to hexadecimal

(3 × 2) (6)

2.2 Perform the following calculations in the binary number system:

2.2.1 $1010_2 \times 101_2$ (3)

2.2.2 $10111_2 + 1110_2$ (2)

2.3 Study FIGURE 1 below and answer the questions.

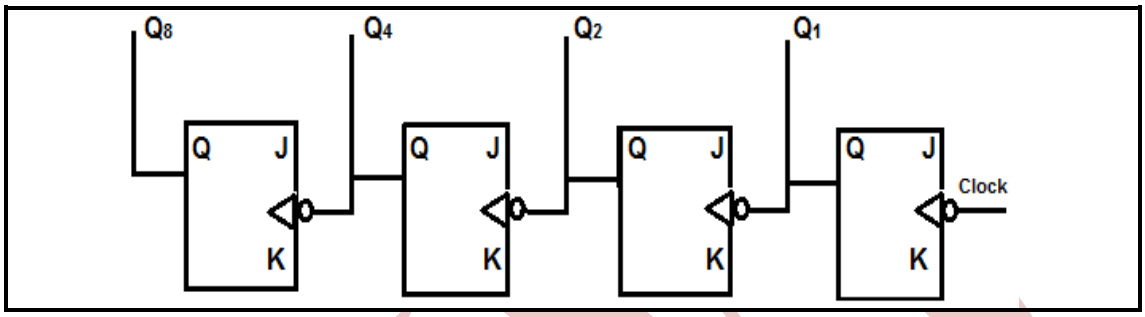

FIGURE 1

2.3.1 State the highest number that FIGURE 1 above can count in binary. (2)

2.3.2 Indicate what the logic level would be of each Q after 19 clock pulses. (4)

2.3.3 Draw the truth table for FIGURE 1 above. (8)

[25]

QUESTION 3

3.1 Indicate whether the following statements are TRUE or FALSE. Choose the answer and write only 'true' or 'false' next to the question number (3.1.1–3.1.5) in the ANSWER BOOK.

3.1.1 The monitor or screen displays data for the user.

3.1.2 The mother board contains memory.

3.1.3 ROM is also called read/write memory.

3.1.4 A cache is also called a RAM cache.

3.1.5 Data cannot be erased from an EEPROM.

(5 × 1) (5)

3.2 Give the names of the PC components in FIGURE 2 below. Write only the answer next to the letter (A–E)in your ANSWER BOOK.

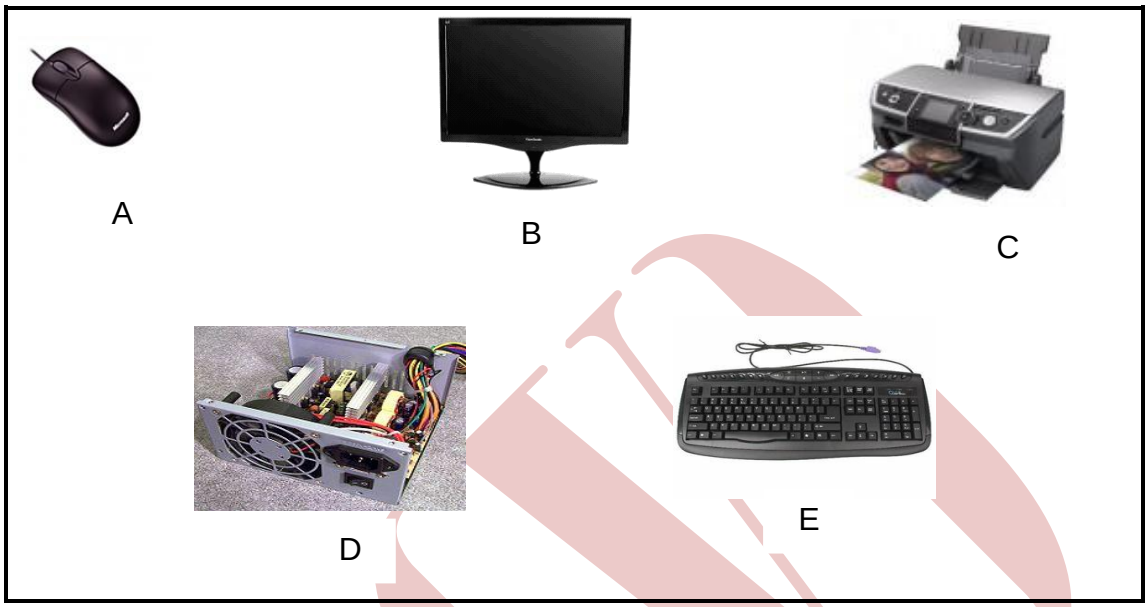

FIGURE 2 (5)

3.3 Name the FIVE steps to be followed for the installation of a new internal drive as additional storage. (5)
[15]

QUESTION 4

4.1 FIGURE 3 below shows a bimetal strip transducer.

Explain the operation of the transducer below in an automatic electric iron.

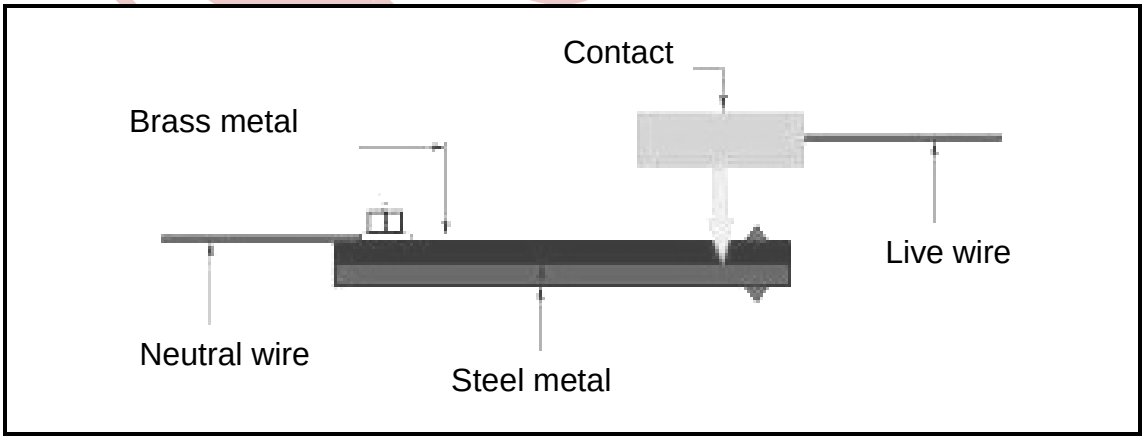

FIGURE 3 **[10]**

QUESTION 5

5.1 Name the FIVE basic components of a PLC. (5)

5.2 Explain the operation of the ladder diagram shown in FIGURE 4 below.

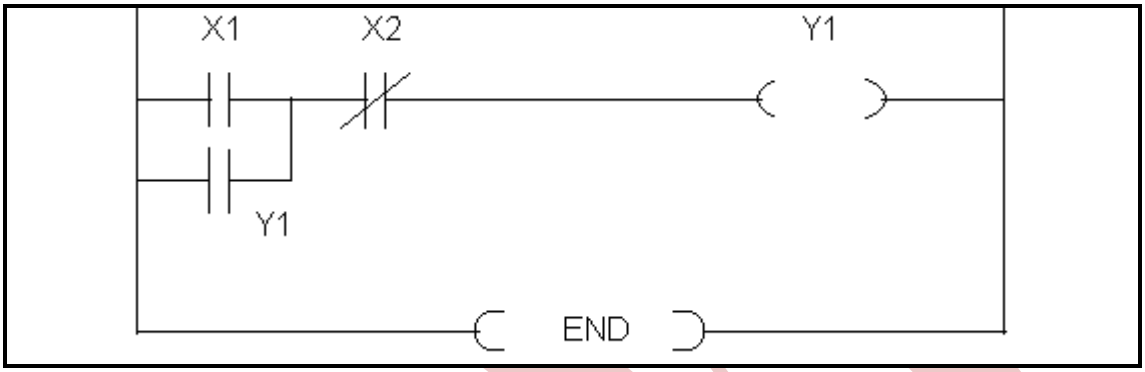

FIGURE 4

(5)
[10]

TOTAL: 100

Copyright reserved