higher education & training

Department:
Higher Education and Training
REPUBLIC OF SOUTH AFRICA

MARKING GUIDELINE

NATIONAL CERTIFICATE (VOCATIONAL)

ELECTRONIC CONTROL AND DIGITAL ELECTRONICS
NQF LEVEL 3

3 March 2020

This marking guideline consists of 7 pages.

Copyright reserved

QUESTION 1: FUNDAMENTALS OF ELECTRONICS

1.1 1.1.1 A digital multimeter:
- Eliminates the error of parallax
- Does not need zeroing
- Has autoranging (3)

1.1.2
- Vertical control
- Horizontal control (2)

1.2 1.2.1 No. of electrons = $2n^2$
= 2.3^2✓
= 18 e✓ (2)

1.2.2
- A trivalent impure atom is added.
- A three-valence electron bond leaves a hole.
- Majority charged carriers are called holes.
- Minority charged carriers are called electrons.
- The process is referred to as acceptor doping. (Any 4 × 1) (4)

1.3

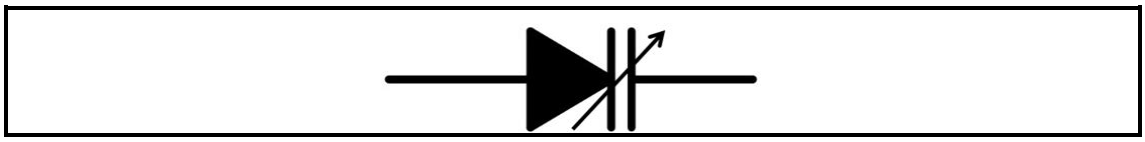

(2)

1.4 1.4.1 B
1.4.2 C
1.4.3 A
1.4.4 E
(4 × 1) (4)

1.5 1.5.1 True
1.5.2 True
1.5.3 False
1.5.4 False
1.5.5 True
(5 × 1) (5)

1.6 1.6.1 Changes the level of primary AC voltage to the required voltage.
1.6.2 Converts AC to DC/AC to pulsating DC.
1.6.3 Converts pulsating DC voltage to smooth DC by reducing ripple.
1.6.4 Keeps the level of the output voltage constant or regulated.
1.6.5 Have components that fuse when there is an over current draw.
(5 × 1) (5)

1.7 1.7.1 The region between the drain and source ohmic regions are doped with P-type material. This forms the channel of the J-FET.✓
The middle region is heavily doped with N-type material forming the gate lead.✓ A depletion region is formed in the gate area between the channel and the gate regions.✓

OR

A P-type material forms the channel with two terminals called the source and the drain.✓✓
A substrate of N-type material is added to the channel with a gate terminal, which is used to adjust the channel width.✓ (3)

1.7.2 Depletion✓ and enhancement✓ modes (2)

1.8 1.8.1
- Infinite or high input resistance
- Infinite or wide bandwidth
- Infinite or high voltage gain
- Output resistance is low or zero
- Zero noise
- 0 output voltage when 0 input voltage (Any 3 × 1) (3)

1.8.2

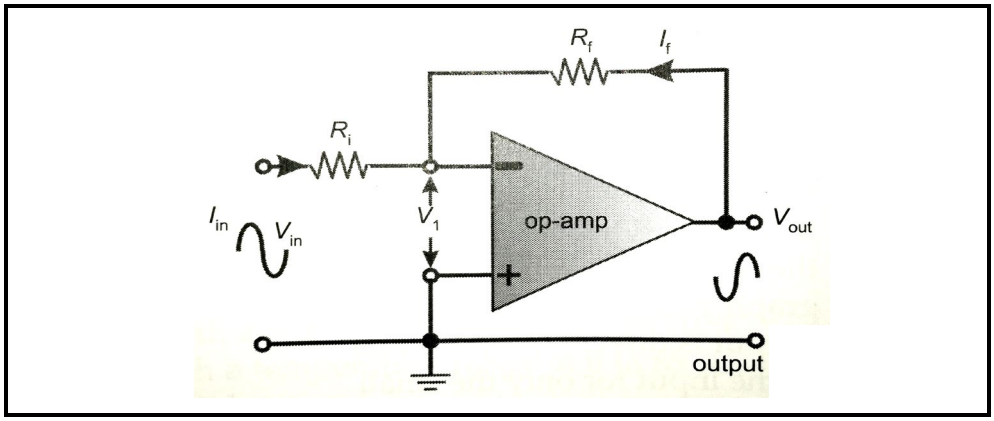

R_f✓
Rin✓
Input (-)✓
Output✓
Correctness✓ (5)
[40]

QUESTION 2: DIGITAL ELECTRONICS

2.1 **NOTE:** Subtract 1 mark from the total (9) if candidate continuously uses the wrong base value in the answers.

2.1.1 63_8 to a binary number

6 = 110✓ 3 = 011✓

110011

Answer: $63_8 = 110011_2$ ✓

2.1.2 $9F_{16}$ to a decimal number

F = 15

9×16^1✓ = 144
15×16^0✓ = 15
+
= 159

Answer: $9F_{16} = 159_{10}$ ✓

2.1.3 107_{10} to an octal number

107 ÷ 8
= 13 ÷ 8 r 0,375 × 8 = 3 ✓
= 1 ÷ 8 r 0,625 × 8 = 5 ✓
= 0 r 0,125 × 8 = 1

Answer: $107_{10} = 153_8$ ✓

(3 × 3) (9)

2.2 BINARY ARITHMETIC

NOTE: Subtract 1 mark from the total (9) if candidate continuously uses the wrong base value in the answers.

2.2.1 Multiply the following binary numbers:

$11001_2 \times 101_2$

			1	1	0	0	1
			×		1	0	1
.	.	1	1	0	0	1✓	
.	0	0	0	0	0	.	
1	1	0	0	1	.	.✓	
1	1	1	1	1	0	1	

Answer = 1111101_2✓

2.2.2 Divide the following binary numbers:

$10110_2 \div 100_2$

```
                 1  0  1  ,1
1  0  0 | 1  0  1  1  0  0  ✓
        -  1  0  0
           0  0  1  1  0
              -  1  0  0     ✓
                 0  1  0  0
                 -  1  0  0
                    .  .  .
```

Answer = $101,1_2$ ✓

2.2.3 Subtract the following binary numbers:

$101001_2 - 1110_2$

```
      2✓   2✓
   1  0  1  0  0  1
-  0  0  1  1  1  0
   0  1  1  0  1  1
```

Answer = 11011_2✓

(3 × 3) (9)

2.3 2.3.1
- Clock pulse
- JK flip-flops
- Negative trailing edge (Any relevant 2 × 1) (2)

2.3.2 2 bit asynchronous up counter and Timing diagram.

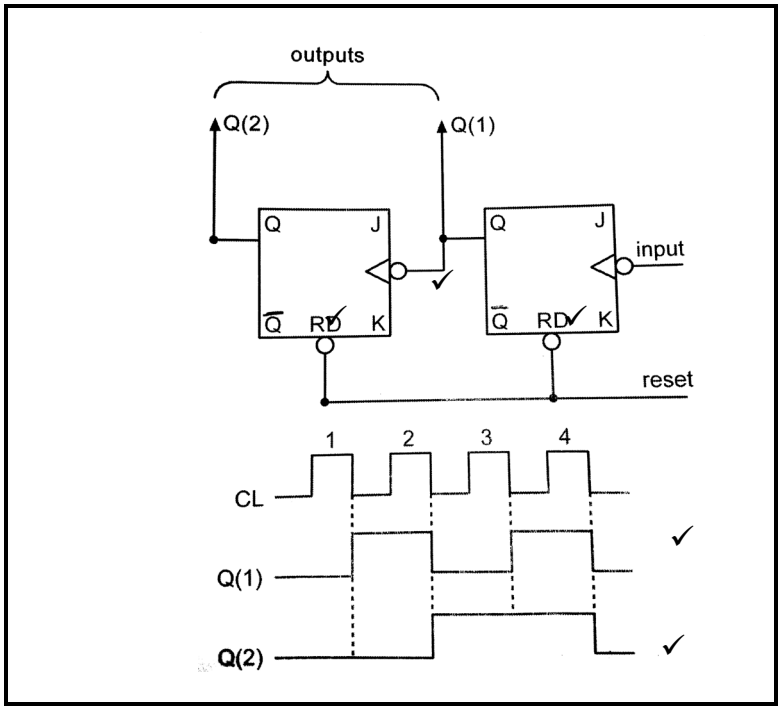

(5)
[25]

QUESTION 3: ASSEMBLING A PERSONAL COMPUTER

3.1 3.1.1 Random Access Memory (RAM) module (1)

3.1.2
- Acts as a platform of a temporary memory (volatile memory)
- Data is held in the module when the user is using the software
- Stores data, programs, et cetera
- Data is extracted from ROM and held in RAM where it is made accessible to the user (Any 3 × 1) (3)

3.2
- Check if the keyboard socket is connected properly.
- Check the cable for damage.
- Check the keyboard for physical damage.
- Connect another keyboard to check if it works properly. (Any 3 × 1) (3)

3.3 Power on self-test (1)

3.4 Attach keyboard✓ to tower using the USB or PS2✓ socket.
Attach mouse✓ to tower using the USB or PS2✓ socket.
Attach monitor✓ to tower using the VGA✓ socket.
Attach the power plug socket and switch it on.✓ (7)
[15]

QUESTION 4: TRANSDUCERS

4.1
- Resistive
- Capacitive
- Inductive
- Photosensitive
- Crystal (Any 3 × 1) (3)

4.2 4.2.1 Bellows
4.2.2 Expands
4.2.3 Distance
4.2.4 Capacitance
4.2.5 Pressure
(5 × 1) (5)

4.3 As sound pressure✓ enters the microphone, the diaphragm exerts pressure on a crystal. The crystal converts the changing pressure into a✓ voltage signal. (2)
[10]

QUESTION 5: PROGRAMMABLE LOGIC CONTROLLERS

5.1
- Switches
- Sensors
- Transducers
- Keypads (Any 2 × 1) (2)

5.2

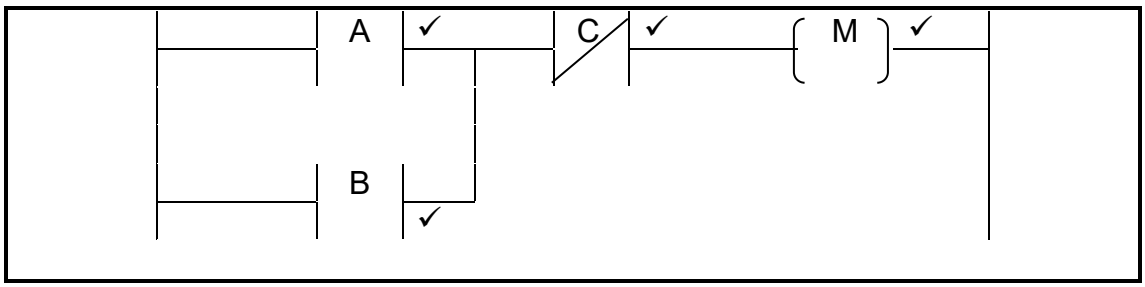

(4)

5.3
- A typical start contact uses a push button for a switch.
- When released, the output relay will de-energise.
- A normally open contact of the output relay is used.
- The NO-contact of the relay is set in OR configuration to the start contact.
- When the output relay energises, it's NO-contact will close.
- This will keep the output relay energised. (Any 4 × 1) (4)

[10]

TOTAL: 100

Copyright reserved