higher education & training

Department:
Higher Education and Training
REPUBLIC OF SOUTH AFRICA

MARKING GUIDELINE

NATIONAL CERTIFICATE (VOCATIONAL)

ELECTRONICS
NQF LEVEL 2

XX February 2020

This marking guideline consists of 8 pages.

Copyright reserved

QUESTION 1

1.1 False
1.2 False
1.3 True
1.4 True
1.5 False
1.6 True
1.7 False
1.8 False
1.9 False
1.10 True

(10 × 1) **[10]**

QUESTION 2

2.1 An increase in current causes an increase in the magnetic field. (1)

2.2 Water is directed past the propellers of the turbine.✓ The force of the flowing water turns the turbine,✓ which spins the metal shaft in the electric generator and produces electricity.✓

OR

The force of falling water pushes against the turbine blades causing the turbine to spin.✓ The turbine converts the kinetic energy of the falling water into mechanical energy.✓ The generator then converts the mechanical energy into electrical energy.✓ (3)

2.3 An increase in length causes an increase in resistance. (1)

2.4 2.4.1

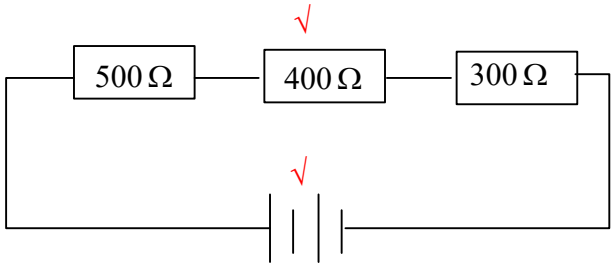

(ONE mark for connecting all resistors in series and ONE mark for power supply)

2.4.2 $R_T = R_1 + R2 + R_3$
$= 500 + 400 + 300$√
$= 1200\Omega$√

2.4.3 $$I = \frac{V}{R}$$
$$= \frac{100}{1200} \surd$$
$$= 0.12A \surd$$

2.4.4 $$P = I^2R$$
$$= 0.12^2 \times 400 \surd$$
$$= 5.76\ W \surd$$

2.4.5 $$V = I \times R$$
$$= 0.12 \times 500 \surd$$
$$= 60\ V \surd$$

(5 × 2) (10)
[15]

QUESTION 3

3.1 3.1.1

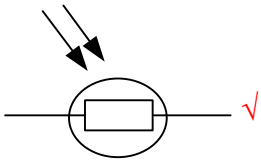

3.1.2

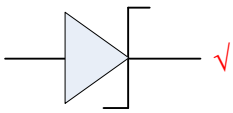

(2 × 1) (2)

3.2

PHOTODIODE	LIGHT-EMITTING DIODE
• Used in reverse bias mode	• Used in forward bias mode
• Needs light to conduct	• Emits light

(2 × 2) (4)

3.3

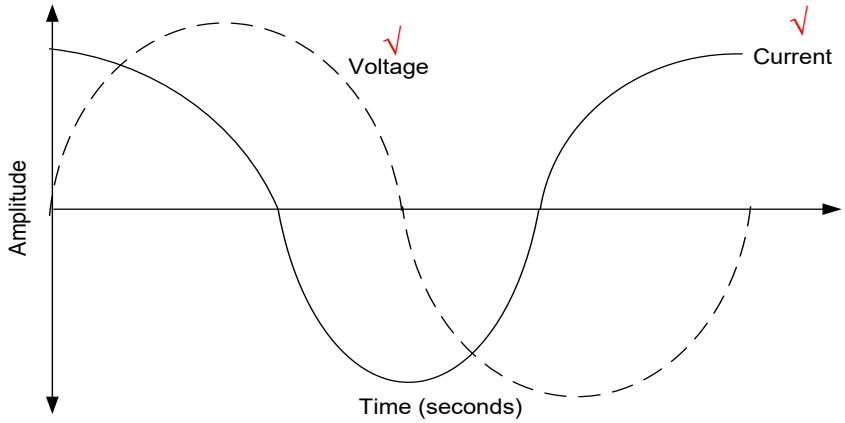

(2)

3.4

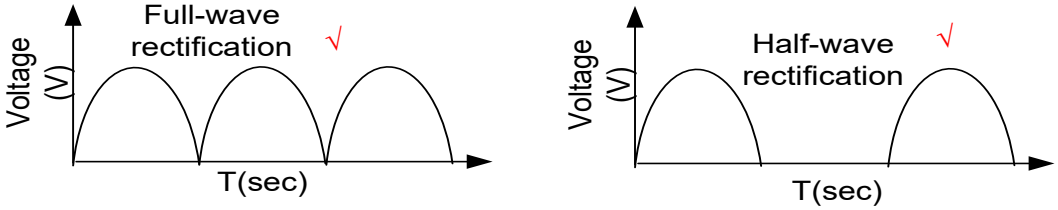

(2)
[10]

QUESTION 4

4.1 CPR will be administered if the victim has no pulse or isn't breathing✓ and the victim should be placed in the recovery position.✓ (2)

4.2
- To carry the electrical current into the earth in case the insulation of the conducting wire is damaged
- To discharge any extra electrical current in order to prevent electrical shock
- To create a safe route for the current to flow through if the live wire touches the casing
- To provide a path back for the faulty current to flow to earth

(Any ONE) (1)

4.3
- To protect consumers from coming into contact with electrical wires.
- To keep electrical wires (earth, live and neutral) from coming into contact with each other. (Any relevant answers) (2)

4.4 Because the three-way cord has an earth wire that is used to protect the television against a faulty current.✓ If you plug the television into a two-way socket, the television will not be protected against such a current.✓ (2)

4.5
- Muscles tighten
- Breathing stops
- Skin burns (Any other relevant 2 × 1) (2)

4.6 It is a document or policy that governs electrical installation and safety. (1)
[10]

QUESTION 5

5.1
- To establish whether current flow exists and whether it is an AC or DC electrical force
- To measure the value of resistance, voltage and current flow
- To establish safe conditions to use electrical appliances
- To find faults in electrical appliances or instruments

(Any other relevant answers) (4)

5.2
- First read the instructions or manufacturer's manual before removing the battery.
- Switch off the instrument or disconnect the test leads from the live circuit.
- Ensure that the instrument is not connected to any external circuit.
- Check in advance what type of battery or cells are used.
- Verify what type of screw is used on the battery lid.
- Remove the screws of the battery compartment at the bottom of the case and then remove the battery.
- If the terminals are corroded, clean or replace them.
- Observe the + and - inside the container and place the battery or batteries cells in the proper position.
- Put the battery compartment back on and tighten and secure the screws.

(Any 5 × 1) (5)

5.3 Voltage is directly proportional to current and inversely proportional to resistance. (1)

[10]

QUESTION 6

6.1 Solder that is not properly spread✓ and by the formation of beads or globules.✓ (2)

6.2
- Vibrations during cool-down period of the solder.
- Too high temperature that caused flux to break down prematurely
- Devices that move around during soldering.
- Repeated pulling or pushing of component's legs when soldering
- Fatigue related to the connection between the component's leg/pin and the copper track causing cracks due to repeated movement.
- Dirt or grease stopping the solder from mantling onto the parts properly.

(Any other relevant 2 × 1) (2)

6.3
- To ensure that components are not damaged by excessive heat
- To ensure that a joint is soldered properly (Any relevant answer) (1)

6.4 Waste material should be stored in different containers according to their hazardous level.✓ Relevant and skilled personnel should dispose of hazardous waste.✓ (2)

Copyright reserved

6.5
- Soldering wire
- Soldering iron
- Helping hands
- Side cutter and long nose (Any 3 × 1) (3)

[10]

QUESTION 7

7.1

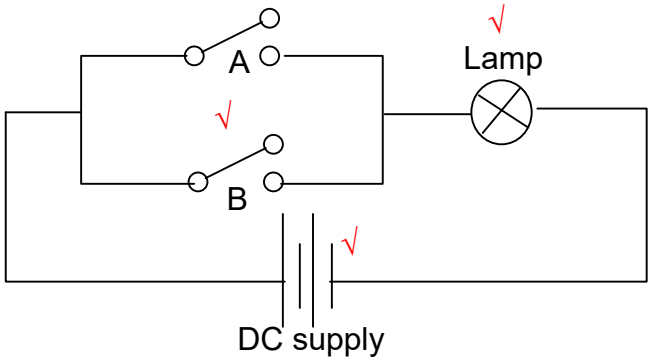

(3)

7.2
- Job number
- Name of client
- When the problem started
- Type of equipment or fault that needs to be fixed
- The symptoms or nature of the fault
- Time allocated for the job
- Date that the task was completed (Any 2 × 1) (2)

7.3
- Measuring the value of the component using a test instrument
- Substituting the current component with another one or bypassing it to see if the circuit works without it
- Performing a diode test on semiconductor materials, such as a diode, transistors
- Applying power across each component, measuring the voltage across it and comparing it with the expected value. (Any 2 × 1) (2)

7.4 7.4.1 Check whether the soldered component has the required value and has been placed at the right spot.✓ Check for polarity and orientation of components, such as a polarised capacitor, IC, diode, et cetera.✓ (2)

7.4.2 Remove any leftover solder or solder that is overlapping into another track on the PCB. (1)

[10]

QUESTION 8

8.1 8.1.1

2	25	R
2	12	1
2	6	0
2	3	0
2	1	1
2	0	1

$25_{10} = 11001_2$ ✓✓

8.1.2

2	18	R
2	9	0
2	4	1
2	2	0
2	1	0
2	0	1

$18_{10} = 10010_2$ ✓✓

(2 × 2) (4)

8.2

Borrowed ones

$$\begin{array}{r} 0\,1\,1 \\ 1\,\cancel{1}\,\cancel{0}\,0\,1 \\ -\,1\,0\,0\,1\,0 \\ \hline 0\,0\,1\,1\,1 \end{array} \surd$$

$00111_2 = \times 2^4 + 0 \times 2^3 + 1 \times 2^2 + 1 \times 2^1 + 1 \times 2^0$ √

$= 7_{10}$ √

(3)

8.3 8.3.1 NOR gate
8.3.2 The lamp will be off (or output will be logic 0)
8.3.3 NOR gate

(3 × 1) (3)
[10]

QUESTION 9

9.1 9.1.1 To show that the PLC is in programming mode
9.1.2 It indicates that there is an error in the program.

(2 × 1) (2)

9.2 Firstly, follow the safety guidelines in the instruction manual to avoid electrical shock or damage the field device.✓ Then make sure that the field device connector has the same shape and number of contact points as the plug on the computer.✓ Turn off the power and unplug the CPU before connecting or disconnecting the field device.✓ Power up the CPU and check if the field device is working properly.✓ (4)

9.3
- PLC
- Programming device
- Programming software
- Connecting cable (4)

[10]

QUESTION 10

10.1 Electronic process that combines TWO or more bandwidth transmissions onto one higher bandwidth signal

10.2 Impedance matching in electrical signals

10.3 A computer network that covers a wide geographical area

OR

Wide Area Network

10.4 A computer network that covers a small geographical area, such as an office block

OR

Local Area Network

10.5 Telecommunication line that connects two areas or a point-to-point connection between two computers

(5 × 1) **[5]**

TOTAL: 100

Copyright reserved